MINGZHU VALVE 明珠阀门

上海明珠阀门制造有限公司
SHANGHAI MINGZHU VALVE MFG.CO.,LTD.

阀门样本 >>>
VALVE STYLEBOOK

※ 蝶阀系列
BUTTERFLY VALVE SERIES

三千控制阀网
www.cv300.com

金属硬密封蝶阀
METLLIC HARD SEALED BUTTERFLY VALVE

产品结构及性能简介 Product structure and performance synopsis

三维偏心硬密封蝶 阀系列产品，系我公司1996年开发的长寿命、节能型蝶阀。产品符合国家标准JB/T8527－97(金属密封蝶阀)，GB／T13927－92(通用阀门压力试验)标准及阀门其它相关标准的规定。

本产品由阀体、蝶板、密封圈、传动机构等主要部件组成。其结构采用三维偏心原理设计，弹性密封和硬软多层密封兼容的加工新工艺，使蝶阀在运行工作时，减少其扭矩力，达到省力，节能之功能。从而确保整体的抗腐蚀．耐高温．,抗靡损的可靠性。其主要性能特点是：

1. 结构独特、型小轻便、操作灵活、省力、方便；
2. 密封可靠，可达到气密封无泄漏；
3. 流量特性趋于直线调节性有最佳；
4. 采用三偏心原理，使密封面近似零磨损延长了阀门的使用寿命；
5. 应用范围广。如：可用于水、蒸气、油品、空气、煤气等介质。
6. 适用不同温度及6.4MPa以下的压力等级，耐腐蚀等各种介质管线。

Three eccentric centre hard sealing butterfly valve is a new product, which is produced by our company in the year of 1996 with a long service life and energy saving. The product correponds with national standard of GB/T8527-97(metallic sealed butterfly valve), GB/T13 927-92(general valve pressure test)and regulations of other relative standard of valve.

This product is composed of body, disc, sealing ring, driving device and etc. The structure design according to principle of three dimen sional eccentricity, new processing technology of flexible seal and hard & soft multiple layers seal, when the butterfly valve is operating, it can reduce the twisting force, reach to the function of labor & energy saving belusaring. Thereby ensure holistically antisepsis, high temperature resistant, wearable reliabiliby of valve. The main characteristic as below:

1.Particular structure, small bulk, skillfull operation , laborsaving, convenient.
2.Seal reliably, it can reach to gas seal without leakage.
3.Flux capability to direct line and best adjusting capability.
4.It adopts the principle of three-dimensional eccentricity, which make the sealing face nealy zero wearing and prolong service life of valve.
5.Wide applied range, suitable for medium such as: water, steam, oil, air, coal gas and etc.
6.Suitable for different temperature, pressure level below 6.4MPa and pipelines with all kinds of medium anti-corrosive.

一千控制阀网
www.cv3000.com

产品型号表示方法 Model compiling specification of product

1 2 3 4 5 6 7

- 7：阀门材料代号: C－碳钢, P－不锈钢, R－铬镍钢
  Code of valve material: C-Carbon steel, P-Stainless steel, R-Cr.Ni Steel
- 6：公称压力值代号
  Code of nominal pressure value
- 5：密封面材料代号: H－不锈钢, F-四氟乙烯
  Code of sealing face material : H-Stainless steel, F-Teflon
- 4：结构形式代号: 3-三偏心结构
  Code of structure type: 3-three eccentric certre structure
- 3：连接形式代号: 7- 对夹式，4-法兰式
  Code of connection type: 7-Wafer type, 4-Flange tye
- 2：传动方式代号: 3-蜗轮传动, 9-电动传动, 6-气动传动
  Code of drive type: 3-Worm wheel, 9-Electric drive, 6-Pneumatic drive
- 1：阀门类别代号: Dt, Dd-蝶阀（Dt-弹性, Dd-多层次)
  Code of valve sort: Dt, Dd-butterfly valve(Dt-elastic),(Dd-multiple layers)

如：Dt373H-16c	弹性对夹式蜗轮传动硬密封蝶阀	压力等级16公斤
Dt343H-16c	弹性法兰式蜗轮传动硬密封蝶阀	压力等级16公斤
Dd373H-16c	多层次对夹式蜗轮传动硬密封蝶阀	压力等级16公斤
Dd343H-16c	多层次法兰式蜗轮传动硬密封蝶阀	压力等级16公斤
Such as: Dt373H-16c	Elastic wafer type worm wheel drived hard sealing butterfly valve	Pressure level 16kgs
Dt343H-16c	Elastic flange type worm gear drived hard sealing butterfly valve	Pressure level 16kgs
Dt373H-16c	Multiple layers wafer type worm gear drived hard sealing butterfly valve	Pressure level 16kgs
Dt343H-16c	Multiple layer flange type worm gear drived hard sealing butterfly valve	Pressure level 16kgs

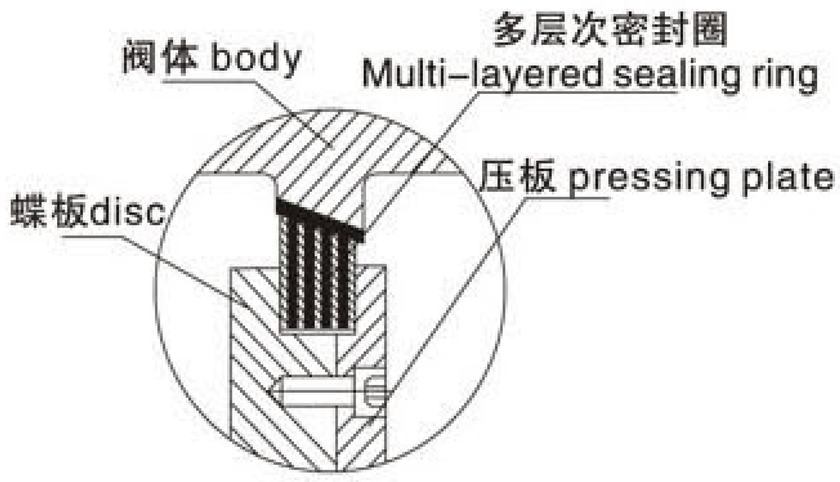

多层次金属硬密封蝶阀结构
Structure of multi-layered metal hard-sealed butterfly valve

应 用 Application

本蝶阀适用于食品、医药、石油化工、电厂、钢厂、工业环保水处理及高层建筑、供排水管道上作调节流量和截断流体最佳装置。

This kind of butterfly valve is suitable for industries of foodstuff, pharmacy, petrochemical, electric power, steel, industrial environmental protection water treatment and building construction. It is an ideal device for flux adjustment and cut in water supply & drainage pipeline.

设计、制造标准 Standard for design and manufacture

设计标准 Design standard: GB/T 12238-1989

法兰标准 Flange standard: GB/T 9113.1-2000

GB/T9115.1-2000, GB/T 9115.2-2000

结构长度 Structure length: GB/T 12221-1989

压力试验 Pressure test: GB/T 13927-1992, JB/T 9092-1999

主要技术参数 Main technical parameter

一手控制阀网 www.cv3000.com

公称通径Nominal diameter	DN(mm)	DN50～DN200			DN50～DN500	
公称压力Nominal pressure	PN(MPa)	0.6	1.0	1.6	2.5	4.0
试验压力Ps(MPa) Test pressure	强度试验strength test	0.9	1.5	2.4	3.75	6.0
	密封试验Seal test	0.66	1.1	1.76	2.75	4.4
	气密封试验Gas seal test	0.6	0.6	0.6	0.6	0.6
适用介质Applicable medium	水、蒸气、油品、酸类腐蚀性等。Water、steam、oil、acid corrosive and so on.					
适用温度Applicable temperature	碳钢 Carbon steel: -29℃～425℃ 不锈钢 Stainless steel: -40℃～600℃					

主要零件材料：Materials for main parts

零件名称 Part name	材料Material
阀体 Body	铸铁、铸钢、不锈钢、铬钼钢、合金钢 Cast iron、cast steel、stainless steel、Cr.Mo.Steel、alloy steel
蝶板 Disc	铸钢、合金钢(镀硬铬)、不锈钢、铬钼钢 Cast steel、Alloy steel、stainless steel、Cr.Mo.Steel
阀座密封圈 Seat seal ring	不锈钢、多层次、聚内脂、抗磨材料 Stainless steel、multiple layers、polyester lactone、wear resisting material
阀杆 Stem	2Cr13.1Cr13不锈钢、铬钼钢 2Cr13.1Cr13 Stainless steel、Cr.Mo.steel
填料Packing	柔性石墨 Flexible graphite

Dd373 H/F
Dd673 H/F
Dd973 H/F
-PN10、16、25 C、P、R、V

多层次金属硬密封蝶阀
MULTI-METALLIC HARD SEALED BUTTERFLY VALVE

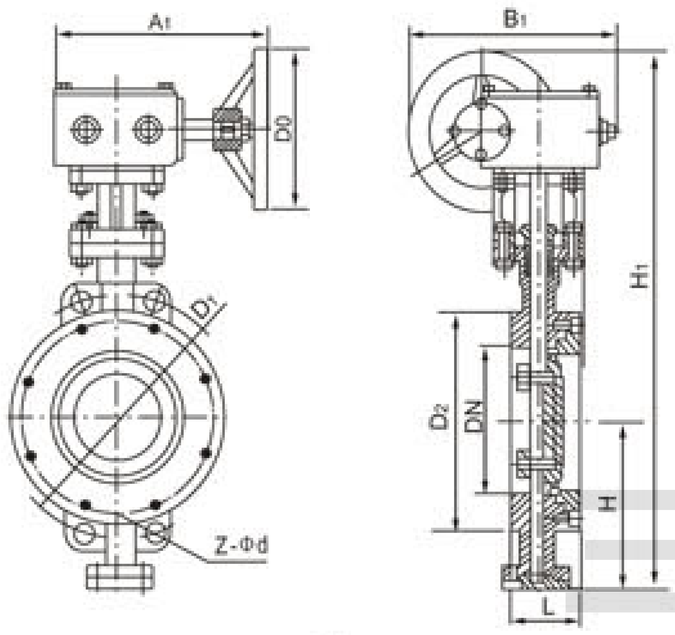

Dd373 H/F 蜗轮型
worm gear type

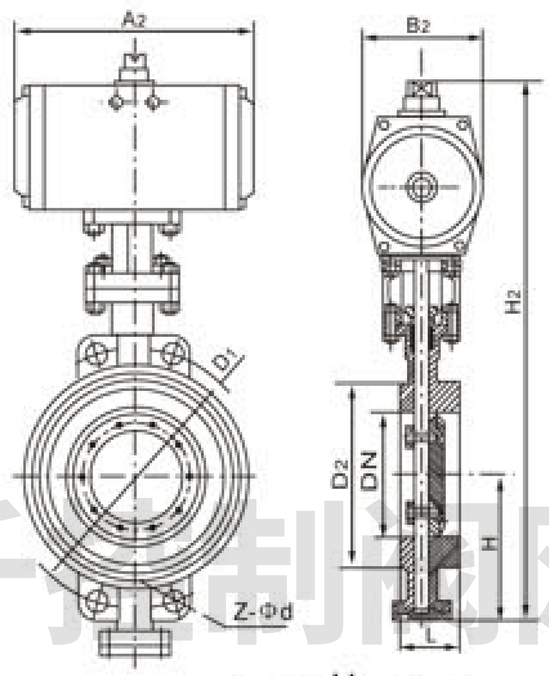

Dd673 H/F 气动型
pneumatic-actuated type

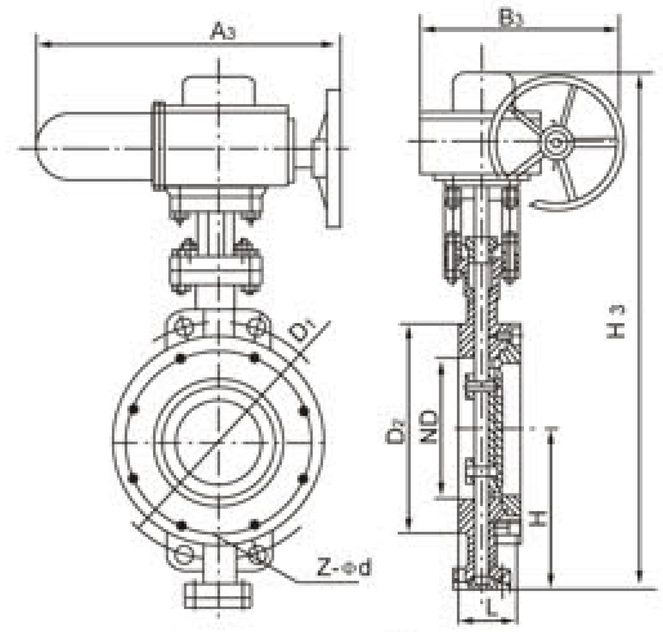

Dd973 H/F 电动型
electric-actuated type

三千阀制网
www.cv3000.com

主要连接及外形尺寸 Main connection and external dimensions(mm)

公称通径DN Nominal diameter		结构长度(标准值) Structure length (standard)	外形尺寸(参考值)External dimension(consult)										连接尺寸(标准值) Connection dimension(standard)				参考重量 reference weight Dt343H (kg)
			H	Dd373H			Dd673H			Dd973H			PN0.6MPa		PN1.0MPa		
毫米mm	英寸inch	L		H1	A1	B1	H2	A2	B2	H3	A3	B3	D1	Z-Φd	D1	Z-Φd	
50	2	43	112	350	180	200	625	245	72	530	250	255	110	4-Φ14	125	4-Φ18	12
65	2 1/2	46	115	370	180	200	625	245	72	530	250	255	130	4-Φ14	145	4-Φ18	13
80	3	49	120	380	180	200	645	245	72	565	250	255	150	4-Φ18	160	8-Φ18	15
100	4	56	138	420	180	200	675	355	92	600	250	255	170	4-Φ18	180	8-Φ18	17
125	5	64	164	460	180	200	715	355	92	640	250	255	200	8-Φ18	210	8-Φ18	27
150	6	70	175	555	270	280	800	355	92	705	300	315	225	8-Φ18	240	8-Φ22	29
200	8	71	215	780	400	425	850	250	170	775	300	315	280	8-Φ18	295	8-Φ22	45
250	10	76	243	840	400	425	925	250	170	945	300	315	335	12-Φ18	350	12-Φ22	69
300	12	83	285	995	450	560	1035	450	220	1070	300	315	395	12-Φ22	400	12-Φ22	86
350	14	92	320	1050	450	560	1070	450	220	1140	300	315	445	12-Φ22	460	16-Φ22	122
400	16	102	350	1220	535	580	1190	450	220	1210	300	315	495	16-Φ22	515	16-Φ26	141
450	18	114	350	1280	535	580	1250	650	280	1335	575	714	550	16-Φ22	565	20-Φ26	191
500	20	127	380	1365	535	580	1290	650	280	1415	575	714	600	20-Φ22	620	20-Φ26	260
600	24	154	435	1460	570	660	1455	850	380	1605	656	810	705	20-Φ26	725	20-Φ30	380
700	28	165	480	1520	750	550	1585	850	380	1844	656	810	810	24-Φ26	840	24-Φ30	450
800	32	190	530	1710	750	550	1700	1250	380	2040	656	810	920	24-Φ30	950	24-Φ33	650
900	36	203	595	1810	750	550	1965	1250	380	2255	785	863	1020	24-Φ30	1050	28-Φ33	830
1000	40	216	650	1900	900	750	2015	1250	380	2380	785	863	1120	28-Φ30	1160	28-Φ36	1050
1200	48	254	775	2280	1000	925	2250	1250	380	2640	785	863	1340	32-Φ33	1380	32-Φ39	1400

主要连接及外形尺寸 Main connection and external dimensions(mm)

公称通径DN Nominal diameter		结构长度(标准值) Structure length (standard)	外形尺寸(参考值)External dimension(consult)										连接尺寸(标准值) Connection dimension(standard)				参考重量 reference weight Dt343H (kg)
			H	Dd373H			Dd673H			Dd973H			PN1.6MPa		PN2.5MPa		
毫米mm	英寸inch	L		H_1	A_1	B_1	H_2	A_2	B_2	H_3	A_3	B_3	D_1	Z-Φd	D_1	Z-Φd	
50	2	43	112	350	180	200	625	245	72	530	250	255	125	4-Φ18	125	4-Φ18	12
65	21/2	46	115	370	180	200	625	245	72	530	250	255	145	4-Φ18	145	8-Φ18	13
80	3	49	120	380	180	200	645	245	72	565	250	255	160	8-Φ18	160	8-Φ18	15
100	4	56	138	420	180	200	675	355	92	600	250	255	180	8-Φ18	190	8-Φ22	17
125	5	64	164	460	180	200	715	355	92	640	250	255	210	8-Φ18	220	8-Φ26	27
150	6	70	175	555	270	280	800	355	92	705	300	315	240	8-Φ22	250	8-Φ26	29
200	8	71	215	780	400	425	850	250	170	775	300	315	295	12-Φ22	310	12-Φ26	45
250	10	76	243	840	400	425	925	250	170	945	300	315	355	12-Φ26	370	12-Φ30	69
300	12	83	285	995	450	560	1035	450	220	1070	300	315	410	12-Φ26	430	16-Φ30	86
350	14	92	320	1050	450	560	1070	450	220	1140	300	315	470	16-Φ26	490	16-Φ33	122
400	16	102	350	1220	535	580	1190	450	220	1210	300	315	525	16-Φ30	550	16-Φ36	141
450	18	114	350	1280	535	580	1250	650	280	1335	575	714	585	20-Φ30	600	20-Φ36	191
500	20	127	380	1365	535	580	1290	650	280	1415	575	714	650	20-Φ33	660	20-Φ36	260
600	24	154	435	1460	570	660	1455	850	380	1605	656	810	770	20-Φ36	770	20-Φ39	380
700	28	165	480	1520	750	550	1585	850	380	1844	656	810	840	24-Φ36	875	24-Φ42	450
800	32	190	530	1710	750	550	1700	1250	380	2040	656	810	950	24-Φ39	990	24-Φ48	650
900	36	203	595	1810	750	550	1865	1250	380	2255	785	863	1050	28-Φ39	1090	28-Φ48	830
1000	40	216	650	1900	900	750	1700	1250	380	2380	785	863	1170	28-Φ42	1210	28-Φ55	1050
1200	48	254	775	2280	1000	925	1865	1250	380	2640	785	863	1390	32-Φ48	1420	32-Φ55	1400

www.cv8000.com

主要连接及外形尺寸 Main connection and external dimensions(mm)

公称通径DN Nominal diameter		结构长度(标准值) Structure length (standard)	外形尺寸(参考值)External dimension(consult)										连接尺寸(标准值) Connection dimension(standard)	
			H	Dd373H			Dd673H			Dd973H			PN4.0MPa	
毫米mm	英寸inch	L		H_1	A_1	B_1	H_2	A_2	B_2	H_3	A_3	B_3	D_1	Z-Φd
50	2	43	112	350	180	200	625	250	170	530	250	255	125	4-Φ18
65	$2^1/2$	46	115	370	270	280	625	250	170	530	250	255	145	8-Φ18
80	3	49	120	380	270	280	645	250	170	565	250	255	160	8-Φ18
100	4	56	138	420	270	280	675	250	170	600	250	255	190	8-Φ22
125	5	64	164	460	380	420	715	450	220	640	250	255	220	8-Φ26
150	6	70	175	555	380	420	800	450	220	705	300	315	250	8-Φ26
200	8	71	208	780	400	425	850	450	220	775	300	315	320	12-Φ30
25	10	76	243	840	400	425	925	450	280	945	300	315	385	12-Φ33
300	12	83	285	995	450	560	1035	650	280	1070	300	315	450	16-Φ33
350	14	92	320	1050	450	560	1070	650	280	1140	300	315	510	16-Φ36
400	16	102	350	1220	535	580	1190	650	280	1210	300	315	585	16-Φ39
450	18	114	350	1280	535	580				1335	575	714	610	20-Φ39
500	20	127	380	1365	535	580				1415	575	714	670	20-Φ42

注: Dd-代表多层次密封结构
Note: Dd-represents for multi-layer sealing structure.

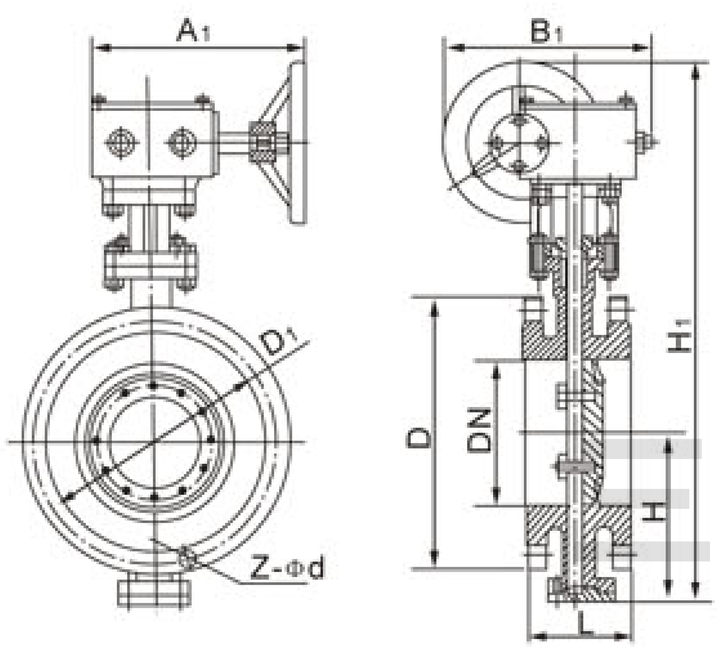

Dd343H

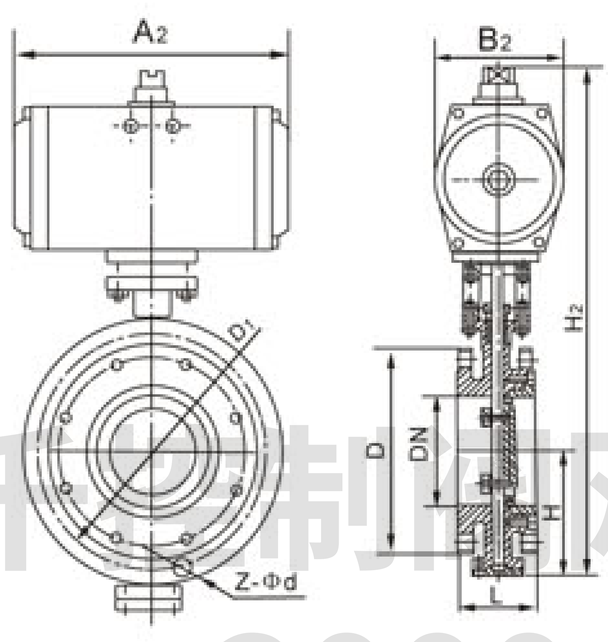

Dd643H

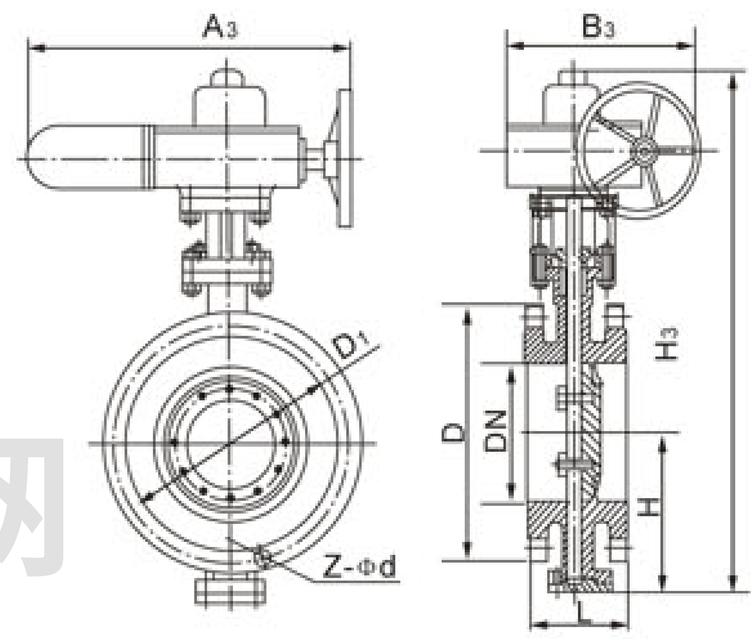

Dd943H

www.cv3000.com

主要连接及外形尺寸 Main connection and external dimensions(mm)

公称通径DN Nominal diameter		结构长度(标准值) Structure length (standard) L		外形尺寸(参考值)External dimension(consult)										连接尺寸(标准值) Connection dimension(standard)						参考重量 reference weight Dt343H (kg)
				H	Dd343H			Dd643H			Dd943H			PN0.6MPa			PN1.0MPa			
毫米mm	英寸inch	短Brief	长Long		H1	A1	B1	H2	A2	B2	H3	A3	B3	D	D1	Z-Φd	D	D1	Z-Φd	
50	2	108	150	112	350	180	200	625	245	72	530	250	255	140	110	4-Φ14	165	125	4-Φ18	17
65	21/2	112	170	115	370	180	200	625	245	72	530	250	255	160	130	4-Φ14	185	145	4-Φ18	20
80	3	114	180	120	380	180	200	645	245	72	565	250	255	190	150	4-Φ18	200	160	8-Φ18	23
100	4	127	190	138	420	180	200	675	355	92	600	250	255	210	170	4-Φ18	220	180	8-Φ18	25
125	5	140	200	164	460	180	200	715	355	92	640	250	255	240	200	8-Φ18	250	210	8-Φ18	40
150	6	140	210	175	555	270	280	800	355	92	705	300	315	265	225	8-Φ18	285	240	8-Φ22	47
200	8	152	230	200	760	400	425	850	250	170	775	300	315	320	280	8-Φ18	340	295	8-Φ22	60
250	10	165	250	243	830	400	425	925	250	170	945	300	315	375	335	12-Φ18	395	350	12-Φ22	95
300	12	178	270	250	895	450	560	1035	450	220	1070	300	315	440	395	12-Φ22	445	400	12-Φ22	124
350	14	190	290	280	950	450	560	1070	450	220	1140	300	315	490	445	12-Φ22	505	460	16-Φ22	181
400	16	216	310	305	1190	535	580	1190	450	220	1210	300	315	540	495	16-Φ22	565	515	16-Φ26	260
450	18	222	330	350	1255	535	580	1250	650	280	1335	575	714	595	550	16-Φ22	615	565	20-Φ26	338
500	20	229	350	380	1305	535	580	1290	650	280	1415	575	714	645	600	20-Φ22	670	620	20-Φ26	360
600	24	267	390	445	1340	570	660	1455	850	380	1605	656	810	755	705	20-Φ26	780	725	20-Φ30	540
700	28	292	430	480	1520	750	550	1585	850	380	1844	656	810	860	810	24-Φ26	895	840	24-Φ30	580
800	32	318	470	530	1710	750	550	1700	1250	380	2040	656	810	975	920	24-Φ30	1015	950	24-Φ33	845
900	36	330	510	580	1810	750	550	1965	1250	380	2255	785	863	1075	1020	24-Φ30	1115	1050	28-Φ33	1050
1000	40	410	550	650	1960	900	750	2015	1250	380	2380	785	863	1175	1120	28-Φ30	1230	1160	28-Φ36	1500
1200	48	470	630	760	2250	1000	925	2250	1250	380	2640	785	863	1405	1340	32-Φ33	1455	1380	32-Φ39	2000
1400	56	530	710	850	2435	1000	925				2886	810	890	1630	1560	36-Φ36	1675	1590	36-Φ42	3000
1600	64	600	790	1030	2780	1000	925				3156	810	890	1830	1760	40-Φ36	1915	1820	40-Φ48	4700
1800	72	670	870	1230	3020	1100	980				3421	830	930	2045	1970	44-Φ39	2115	2020	44-Φ48	6500
2000	80	760	950	1350	3270	1100	980				3685	850	940	2265	2180	48-Φ42	2325	2230	48-Φ48	8700

主要连接及外形尺寸 Main connection and external dimensions(mm)

公称通径DN Nominal diameter		结构长度(标准值) Structure length (standard) L		外形尺寸(参考值)External dimension(consult)										连接尺寸(标准值) Connection dimension(standard)						参考重量 reference weight Dt343H (kg)
				H	Dd343H-16/25			Dd643H-16/25			Dd943H-16/25			PN1.6MPa			PN2.5MPa			
毫米mm	英寸inch	短Brief	长Long		H_1	A_1	B_1	H_2	A_2	B_2	H_3	A_3	B_3	D	D_1	Z-Φd	D	D_1	Z-Φd	
50	2	108	150	112	350	180	200	625	245	72	530	250	255	165	125	4-Φ18	165	125	4-Φ18	19
65	21/2	112	170	115	370	180	200	625	245	72	530	250	255	185	145	4-Φ18	185	145	8-Φ18	22
80	3	114	180	120	380	180	200	645	245	72	565	250	255	200	160	8-Φ18	200	160	8-Φ18	25
100	4	127	190	138	420	180	200	675	355	92	600	250	255	220	180	8-Φ18	235	190	8-Φ22	28
125	5	140	200	164	460	180	200	715	355	92	640	250	255	250	210	8-Φ18	270	220	8-Φ26	43
150	6	140	210	175	555	270	280	800	355	92	705	300	315	285	240	8-Φ22	300	250	8-Φ26	50
200	8	152	230	200	760	400	425	850	250	170	775	300	315	340	295	12-Φ22	360	310	12-Φ26	64
250	10	165	250	243	830	400	425	925	250	170	945	300	315	405	355	12-Φ26	425	370	12-Φ30	99
300	12	178	270	250	895	450	560	1035	450	220	1070	300	315	460	410	12-Φ26	485	430	16-Φ30	130
350	14	190	290	280	950	450	560	1070	450	220	1140	300	315	520	470	16-Φ26	555	490	16-Φ33	188
400	16	216	310	305	1190	535	580	1190	450	220	1210	300	315	580	525	16-Φ30	620	550	16-Φ36	270
450	18	222	330	350	1255	535	580	1250	650	280	1335	575	714	640	585	20-Φ30	670	600	20-Φ36	350
500	20	229	350	380	1305	535	580	1290	650	280	1415	575	714	715	650	20-Φ33	730	660	20-Φ36	375
600	24	267	390	445	1340	570	660	1455	850	380	1605	656	810	840	770	20-Φ36	845	770	20-Φ39	560
700	28	292	430	480	1520	750	550	1585	850	380	1844	656	810	910	840	24-Φ36	960	875	24-Φ42	610
800	32	318	470	530	1710	750	550	1700	1250	380	2040	656	810	1025	950	24-Φ39	1085	990	24-Φ48	880
900	36	330	510	580	1810	750	550	1865	1250	380	2255	785	863	1125	1050	28-Φ39	1185	1090	28-Φ48	1100
1000	40	410	550	650	1960	900	750	2015	1250	380	2380	785	863	1255	1170	28-Φ42	1320	1210	28-Φ55	1600
1200	48	470	630	760	2250	1000	925	2250	1250	380	2640	785	863	1485	1390	32-Φ48	1530	1420	32-Φ55	2150
1400	56	530	710	850	2435	1000	925				2886	810	890	1685	1590	36-Φ48	1755	1640	36-Φ60	3200
1600	64	600	790	1030	2780	1000	925				3156	810	890	1930	1820	40-Φ55	1975	1860	40-Φ60	5000
1800	72	670	870	1230	3020	1100	980				3421	830	930	2130	2020	44-Φ55	2195	2070	44-Φ68	6900
2000	80	760	950	1350	3270	1100	980				3685	850	940	2345	2230	48-Φ60	2425	2300	48-Φ68	9100

www.cv3000.com

主要连接及外形尺寸 Main connection and external dimensions(mm)

公称通径DN Nominal diameter		结构长度(标准值) Structure length (standard) L		外形尺寸(参考值)External dimension(consult)										连接尺寸(标准值) Connection dimension(standard)		
				H	Dd343H-40			Dd643H-40			Dd943H-40			PN4.0MPa		
毫米mm	英寸inch	短Brief	长Long		H_1	A_1	B_1	H_2	A_2	B_2	H_3	A_3	B_3	D	D_1	Z-Φd
50	2	108	150	112	350	180	200	625	250	170	530	250	255	165	125	4-Φ18
65	$2^1/2$	112	170	115	370	270	280	625	250	170	530	250	255	185	145	8-Φ18
80	3	114	180	120	380	270	280	645	250	170	565	250	255	200	160	8-Φ18
100	4	127	190	138	420	270	280	675	250	170	600	250	255	235	190	8-Φ22
125	5	140	200	164	460	380	420	715	450	220	640	250	255	270	220	8-Φ26
150	6	140	210	175	555	380	420	800	450	220	705	300	315	300	250	8-Φ26
200	8	152	230	200	760	400	425	850	450	220	775	300	315	375	320	12-Φ30
250	10	165	250	243	830	400	425	925	450	280	945	300	315	450	385	12-Φ33
300	12	178	270	250	895	450	560	1035	650	280	1070	300	315	515	450	16-Φ33
350	14	190	290	280	950	450	560	1070	650	280	1140	300	315	580	510	16-Φ36
400	16	216	210	305	1190	535	580	1190	650	280	1210	300	315	660	585	16-Φ39
450	18	222	330	350	1255	535	580				1335	575	714	685	610	20-Φ39
500	20	229	350	380	1305	535	580				1415	575	714	755	670	20-Φ42

注: Dd-代表多层次密封结构
Note: Dd-represents for multi-layer sealing structure.

对焊式金属硬密封蝶阀
Butt-welding metallic hard sealed butterfly valve

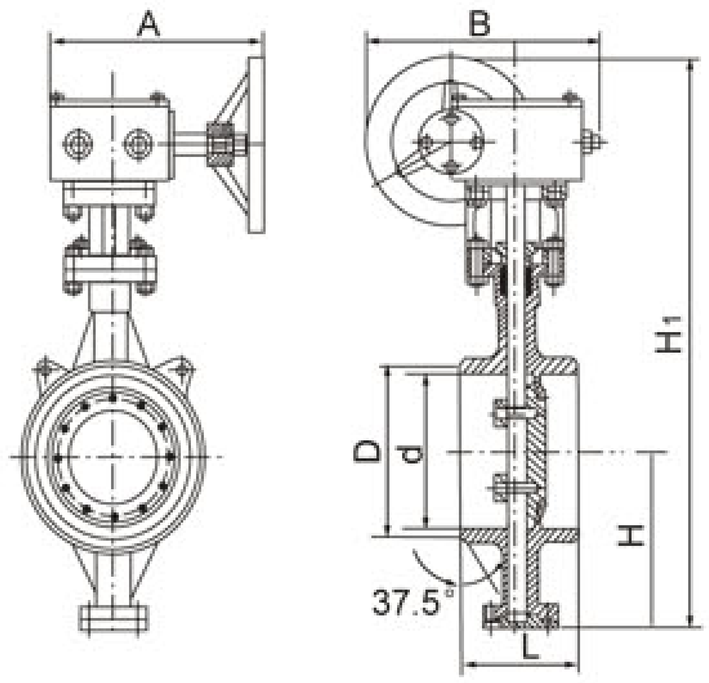

性能规范 Property specification

用途及特点 Application and characteristic

本蝶阀适用于高温、高压、防火、保温等管道上作启闭或调节介质之用。其主要特点如下：

1、结构紧凑、体积小、重量轻、操作灵活、使用方便；

2、采用三维偏心弹性或多层次硬密封结构，其密封性能可靠达到零泄漏；

3、此阀无法兰，对管道的保温包扎带来很大方便和美观。

4、具有耐高温、高压、耐腐蚀、耐磨损等特点。

This kind of butterfly valve is suitable for applying in high temperature, high pressure, fireproof, jacket and etc. pipelines as a device of switch and adju stment of medium. Main characteristics below:

1. Compact structure, tiny bulk, light, flexible and convenient operation.
2. It adopts structure of three-eccentric elasticity or multi-layers hard sealing, getting reliable sealing effect with zero leakage.
3. Without Flange, it makes pipeline elegantly and binding up conveniently.
4. It has characteristics of high temperature resistance, high pressure resistance, antisepsis, wearable etc.

传动型式Driving mode

蜗轮传动、气动传动、电动传动。

Worm wheel drive、pneumatic drive、electric drive.

设计、制造标准

Standard for design and manufacture

焊接尺寸Jointing dimension: GB/T 12224, ANSI B16.25, DIN2559

结构长度Structure length: GB/T 12221-1989, API609

压力试验Pressure test: GB/T 13927-1992, API598

主要连接及外形尺寸

Main connection and external dimensions(mm)

公称压力(1.0 ,1.6,2.5MPa) Nominal pressure									
通径Diameter		外形尺寸(参考值)External dimension(consult)							参考重量(kg) Consult weight
毫米mm	英寸inch	L	D	d	H	H_1	A	B	
80	3	180	90	78	90	356	180	200	38
100	4	190	110	96	106	387	180	200	40
125	5	200	135	121	122	413	180	200	60
150	6	210	161	146	136	459	270	280	65
200	8	230	222	202	215	585	400	425	85
250	10	250	278	254	247	649	400	425	135
300	12	270	330	303	288	771	450	560	175
350	14	290	382	351	333	929	450	560	195
400	16	310	432	398	359	993	535	580	295
450	18	330	484	450	405	1053	535	580	350
500	20	350	535	501	444	1245	535	580	510
600	24	390	636	602	521	1750	570	660	625
700	28	430	726	692	586	1519	750	550	925
800	32	470	826	792	659	1659	750	550	1260
900	36	510	926	892	720	1829	750	550	1790
1000	40	550	1028	992	780	1949	900	750	1940
1200	48	630	1228	1192	889	2243	1000	925	2810
1400	56	710	1428	1392	1000	2462	1000	925	3500

三千控制阀网 www.cv3000.com

主要技术参数 Main technical parameter

公称通径Nominal diameter	DN(mm)	50～2000				
公称压力Nominal pressure	PN(MPa)	0.6	1.0	1.6	2.5	4.0
试验压力 Ps(MPa) Test pressure	强度试验Strength test	0.9	1.5	2.4	3.75	6.0
	密封试验Seal test	0.66	1.1	1.76	2.75	4.4
	气密封试验Gas seal test	0.6	0.6	0.6	0.6	0.6
适用介质Applicable medium	水、蒸气、油品、酸类腐蚀性等。Water、steam、oil、acid corrosive and so on.					
适用温度Applicable temperature	碳钢Carbon steel:-29℃～425℃ 不锈钢Stainless steel:-40℃～600℃					

主要零件的材质 Material for main parts

零件名称Part name	材 料 Material
阀体Body	铸钢、不锈钢、铬钼钢及特殊材料Cast steel,stainless steel、Cr.Mo.steel and special material
蝶板Disc	铸钢、合金钢(镀硬铬)、不锈钢、铬钼钢及特殊材料 Cast steel、alloy steel、stainless steel、Cr.Mo.steel and special material
密封圈Seal ring	不锈钢、抗磨材料Stainless steel、grind resisting material
阀杆Stem	2Cr13、1Cr13不锈钢、铬钼钢 2Cr13、1Cr13 Stainless steel、Cr.Mo.steel
填料Packing	柔性石墨Flexible graphite

主要性能规范：Main property and specification

用途及特点 Application and characteristic

伸缩蝶阀适用于温度≤80℃，公称压力≤1.6MPa的食品，医药、化工、石油、电力、轻纺、造纸等给排水、气体管道上作调节流量和截流介质的作用，具有补偿管道热胀冷缩的功能。其主要特点如下：

1、设计新颖、合理、结构独特、重量轻、操作方便、启闭迅速；

2、伸缩蝶阀除了能作调节和截流作用、补偿管道温差所产生的热胀冷缩功能外，还能为安装更换、维修阀门提供方便；

3、密封部位可调节更换，密封性能可靠等特点。

Telescopic butterfly valve is suitable for applying in water supply & drainage and gas pipeline of foodstuff, pharmacy, petrochemical, petroleum, electric power, light textile, paper making and etc. industries to adjust and cut off flux when temperature ≤80℃ and nominal pressure≤1.6MPa and also with the function of compensating the expansion and contraction of pipeline. Main characteristics below:

1. Novel and reasonable design, particular configuration, light and easy operation and rapidly start &stop .
2. It can also provide convenience for valve installation, exchange and maintenance besides the function of flux adjustment and cut off and compensation of pipe expansion and contraction caused by temperature differential.
3. The sealing component is adjustable and renewable with reliable sealing effect.

设计、制造标准 Standard for design and manufacture

- 设计标准: GB/T 12238-1989
  Design standard: GB/T 12238-1989
- 法兰连接尺寸:GB/T 9113.1-2000, GB/T 9113.2-2000 GB/T 9115.1-2000, GB/T 9115.2-2000
  Flange connection dimension:GB/T 9113.1-2000, GB/T 9113.2-2000 GB/T 9115.1-2000, GB/T 9115.2-2000
- 压力试验：GB/T 13927-1992, JB/T 9092-1999
  Pressure test：GB/T 13927-1992, JB/T 9092-1999

三千控制阀网
www.cv3000.com

主要技术参数 Main technical parameter

公称通径Nominal diameter	DN(mm)	50~2000		
公称压力Nominal pressure	PN(MPa)	0.6	1.0	1.6
试验压力 Ps(MPa) Test pressure	强度试验 Strength test	0.9	1.5	2.4
	密封试验 Seal test	0.66	1.1	1.76
	气密封试验 Gas seal test	0.6	0.6	0.6
适用温度Applicable temperature	≤80℃			
适用介质Applicable medium	空气、水、蒸气、煤气、油品等。Air、water、steam、coal gas、oil goods.			
驱动形式Driving mode	手动、蜗杆蜗轮传动、气传动、电传动。Hand drive、worm wheel drive、pneumatic drive、electric drive.			

主要零件材料：Materials for main parts

零件名称 Part name	材 料 Material
阀体 Body	铸铁、铸钢、不锈钢、铬钼钢、合金钢 Cast iron、cast steel、stainless steel、Cr.Mo.steel、alloy steel
蝶板 Disc	铸钢、合金钢、不锈钢、铬钼钢 Cast steel、alloy steel、stainless steel、Cr.Mo.steel
密封圈 Seal ring	橡胶、聚四氟、聚内脂、不锈钢 Rubber、teflon、polyester alctone、stainless steel
阀杆 Stem	2Cr13、不锈钢、铬钼钢 2Cr13、stainless steel、Cr.Mo.steel
伸缩管 Telescopic tube	铸铁、铸钢、不锈钢、铬钼钢 Cast iron、cast steel、stainless steel、Cr.Mo.steel
填料 Packing	柔性石墨 Flexible graphite

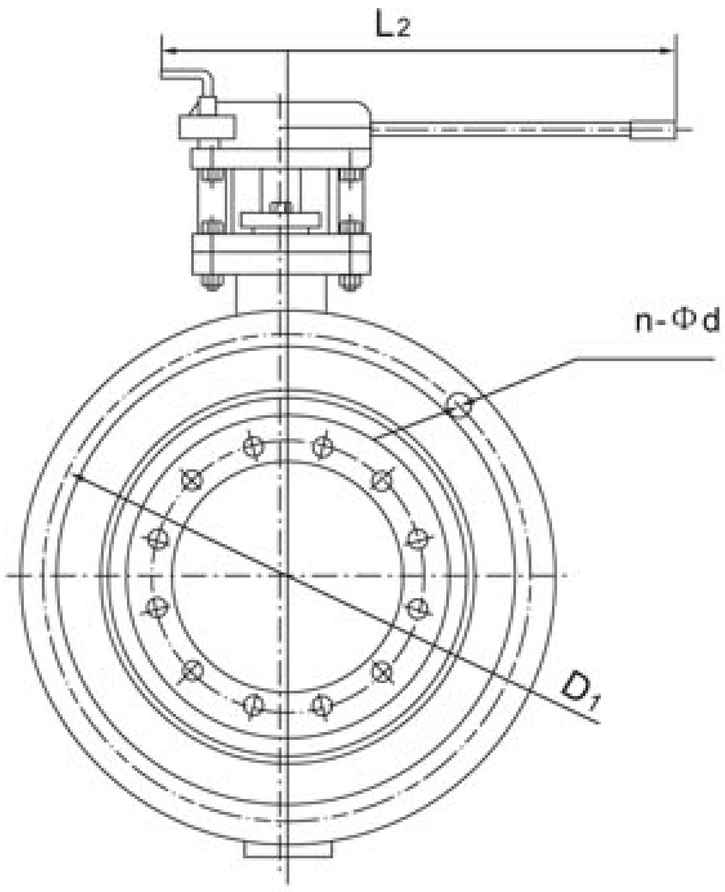

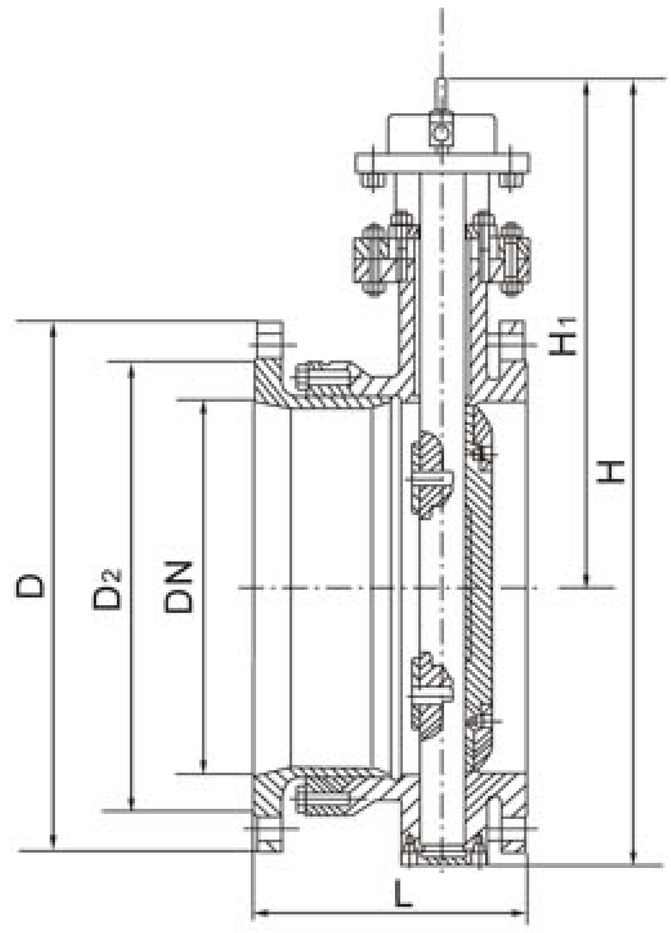

主要连接及外形尺寸 Main connection and external dimensions(mm)

三千控制阀网 www.cv3000.com

公称通径 DN Nominal diameter		外形尺寸(参考值) External dimension(consult)						法兰尺寸和螺栓孔尺寸(标准值) Flange dimension and bolted bore dimension(standard)											
								0.6MPa				1.0MPa				1.6MPa			
毫米 mm	英寸 inch	H	H1	设计最大长度(L) Max design extent	设计最小长度(L) Min design extent	设计长度(L) Design extent	L2	D	D1	D2	n-d	D	D1	D2	n-d	D	D1	D2	n-Φd
50	2	325	240	186	156	171	265	140	110	88	4-14	165	125	99	4-18	165	125	99	4-Φ18
65	2 1/2	340	250	190	160	175	265	160	130	108	4-14	185	145	118	4-18	185	145	118	4-Φ18
80	3	355	255	198	166	182	320	190	150	124	4-18	200	160	132	8-18	200	160	132	8-Φ18
100	4	400	275	228	188	208	320	210	170	144	4-18	220	180	156	8-18	220	180	156	8-Φ18
125	5	435	300	240	201	220	340	240	200	176	8-18	250	210	184	8-18	250	210	184	8-Φ18
150	6	455	310	246	206	226	390	265	225	199	8-18	285	240	211	8-22	285	240	211	8-Φ22

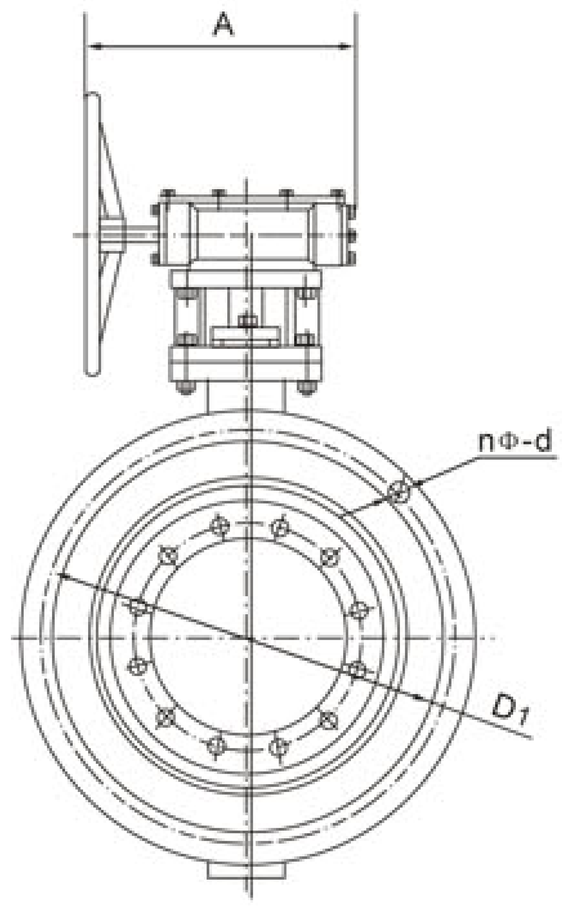

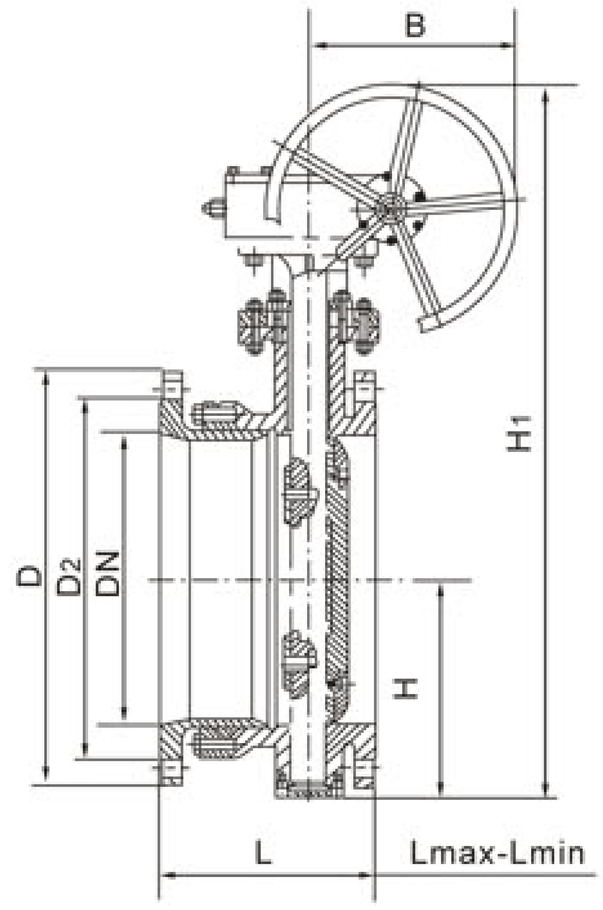

主要连接及外形尺寸 Main connection and external dimensions(mm)

三十控制网 www.cv3000.com

公称通径 DN Nominal diameter		外形尺寸(参考值) External dimension(consult)					法兰尺寸和螺栓孔尺寸(标准值) Flange dimension and bolted bore dimension(standard)													
									0.6MPa				1.0MPa				1.6MPa			
毫米 mm	英寸 inch	H	H1	设计最大长度(L) Max design extent	设计最小长度(L) Min design extent	设计长度(L) Design extent	A	B	D	D1	D2	n-Φd	D	D1	D2	n-Φd	D	D1	D2	n-Φd
50	2	80	309	164	138	151	180	200	140	110	88	4-Φ14	165	125	99	4-Φ18	165	125	99	4-Φ18
65	2 1/2	95	337	190	154	172	180	200	160	130	108	4-Φ14	185	145	118	4-Φ18	185	145	118	4-Φ18
80	3	98	347	198	166	182	180	200	190	150	124	4-Φ18	200	160	132	8-Φ18	200	160	132	8-Φ18
100	4	114	373	228	188	208	180	200	210	170	144	4-Φ18	220	180	156	8-Φ18	220	180	156	8-Φ18
125	5	128	405	240	201	220	180	200	240	200	174	8-Φ18	250	210	184	8-Φ18	250	210	184	8-Φ18
150	6	139	440	246	206	226	270	280	265	225	199	8-Φ18	285	240	211	8-Φ22	285	240	211	8-Φ22
200	8	174	612	265	219	242	400	425	320	280	254	8-Φ18	340	295	266	8-Φ22	340	295	266	12-Φ22
250	10	215	693	295	240	267	400	425	375	335	309	12-Φ18	395	350	319	12-Φ22	405	355	319	12-Φ26
300	12	245	747	308	254	282	450	560	440	395	363	12-Φ22	445	400	370	12-Φ22	460	410	370	12-Φ26
350	14	270	802	327	272	300	450	560	490	445	413	12-Φ22	505	460	429	16-Φ22	520	470	429	16-Φ26
400	16	305	991	368	308	338	535	580	540	495	463	16-Φ22	565	515	480	16-Φ26	580	525	480	16-Φ30
450	18	325	1037	370	310	340	535	580	595	550	518	16-Φ22	615	565	530	20-Φ26	640	585	548	20-Φ30
500	20	360	1127	392	332	362	535	580	645	600	568	20-Φ22	670	620	582	20-Φ26	715	650	609	20-Φ33
600	24	445	1377	441	375	408	570	660	755	705	667	20-Φ26	780	725	682	20-Φ30	840	770	720	20-Φ36
700	28	505	1496	460	400	430	750	550	860	810	772	24-Φ26	895	840	794	24-Φ30	910	840	794	24-Φ36
800	32	560	1584	499	445	475	750	550	975	920	878	24-Φ30	1015	950	901	24-Φ33	1025	950	901	24-Φ39
900	36	630	1676	520	460	490	750	550	1075	1020	978	24-Φ30	1115	1050	1001	28-Φ33	1125	1050	1001	28-Φ39
1000	40	680	1760	600	530	565	900	750	1175	1120	1078	28-Φ30	1230	1160	1112	28-Φ36	1255	1170	1112	28-Φ42
1200	48	795	2018	675	571	623	1000	925	1405	1340	1295	32-Φ33	1455	1380	1328	32-Φ39	1485	1390	1328	32-48
1400	56	900	2363	760	683	722	1000	925	1630	1560	1510	36-Φ36	1675	1590	1530	36-Φ42	1685	1590	1530	36-48
1600	64	1100	2723	860	770	815	1000	925	1830	1760	1710	40-Φ36	1915	1820	1750	40-Φ48	1930	1820	1750	40-55
1800	72	1124	2844	930	830	880	1100	980	2045	1970	1918	44-Φ39	2115	2020	1950	44-Φ48	2130	2020	1950	44-55
2000	80	1292	3127	1020	920	970	1100	980	2265	2180	2125	48-Φ42	2325	2230	2150	48-Φ48	2345	2230	2150	48-60

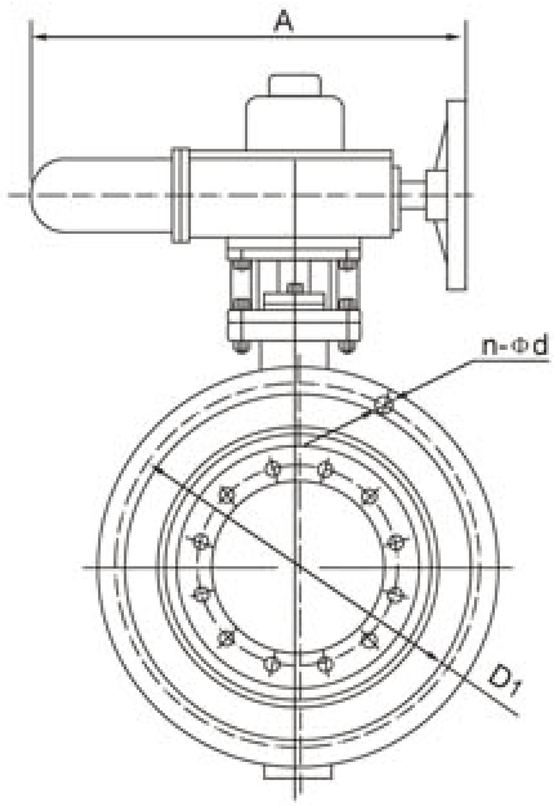

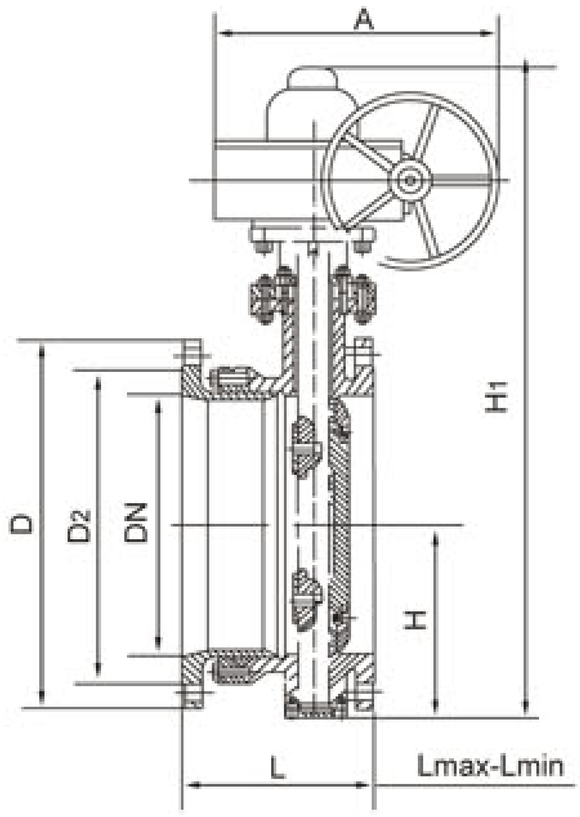

主要连接及外形尺寸 Main connection and external dimensions(mm)

三十控制阀网 www.cv3000.com

公称通径 DN Nominal diameter		外形尺寸(参考值) External dimension(consult)					法兰尺寸和螺栓孔尺寸(标准值) Flange dimension and bolted bore dimension(standcrd)														电动装置型号(参考) electric actuator type (consult)
									0.6MPa				1.0MPa				1.6MPa				
毫米 mm	英寸 inch	H	H1	设计最大长度(L) Max design extent	设计最小长度(L) Min design extent	设计长度(L) Design extent	A	B	D	D1	D2	n-Φd	D	D1	D2	n-Φd	D	D1	D2	n-d	
50	2	80	440	186	156	171	250	255	140	110	88	4-14	165	125	99	4-18	165	125	99	4-18	QB10-1
65	21/2	95	445	190	160	175	250	255	160	130	108	4-14	185	145	118	4-18	185	145	118	4-18	QB10-1
80	3	98	476	198	166	182	250	255	190	150	124	4-18	200	160	132	8-18	200	160	132	8-18	QB10-1
100	4	114	504	228	188	208	250	255	210	170	144	4-18	220	180	156	8-18	220	180	156	8-18	QB10-1
125	5	128	550	240	201	220	250	255	240	200	174	8-18	250	210	184	8-18	250	210	184	8-18	QB20-1
150	6	139	652	240	206	226	300	315	265	225	199	8-18	285	240	211	8-22	285	240	211	8-22	QB20-1
200	8	174	732	265	219	242	300	315	320	280	254	8-18	340	295	266	8-22	340	295	266	12-22	QB60-1
250	10	215	823	295	240	267	300	315	375	335	309	12-18	395	350	319	12-22	405	355	319	12-26	QB60-1
300	12	245	877	308	254	282	300	315	440	395	363	12-22	445	400	370	12-22	460	410	370	12-26	QB120-1
350	14	270	932	327	272	300	300	315	490	445	413	12-22	505	460	429	16-22	520	470	429	16-26	QB120-1
400	16	305	1047	368	308	338	300	315	540	495	463	16-22	565	515	480	16-26	580	525	480	16-30	QB250-1
450	18	325	1092	370	310	340	575	714	595	550	518	16-22	615	565	530	20-26	640	585	548	20-30	QB250-1
500	20	360	1182	392	332	362	575	714	645	600	568	20-22	670	620	582	20-26	715	650	609	20-33	QB250-1
600	24	445	1380	441	375	408	656	810	755	705	667	20-26	780	725	682	20-30	840	770	720	20-36	QB500-0.5
700	28	505	1502	460	400	445	656	810	860	810	772	24-26	895	840	794	24-30	910	840	794	24-36	QB500-0.5
800	32	560	1545	499	445	475	656	810	975	920	878	24-30	1015	950	901	24-33	1025	950	901	24-39	ZA60
900	36	630	1710	520	460	490	785	863	1075	1020	978	24-30	1115	1050	1001	28-33	1125	1050	1001	28-39	ZA60
1000	40	680	1805	600	530	565	785	863	1175	1120	1078	28-30	1230	1160	1112	28-36	1255	1170	1112	28-42	ZA60
1200	48	795	2096	675	571	623	785	863	1405	1340	1295	32-33	1455	1380	1328	32-39	1485	1390	1328	32-48	ZA120
1400	56	900	2296	760	684	722	790	1338	1630	1560	1510	36-36	1675	1590	1530	36-42	1685	1590	1530	36-48	ZA120
1600	64	1100	2720	860	770	815	868	1476	1830	1760	1710	40-36	1915	1820	1750	40-48	1930	1820	1750	40-55	ZA250
1800	72	1124	2830	930	830	880	868	1476	2045	1970	1918	44-39	2115	2020	1950	44-48	2130	2020	1950	44-55	ZA250
2000	80	1292	3120	1020	920	970	965	1600	2265	2180	2125	48-42	2325	2230	2150	48-48	2345	2230	2150	48-60	ZA250

伸缩蝶阀安装使用注意事项 Notice for installation and usage of telescopic butterfly valve

1、伸缩蝶阀在安装前必须平放，切勿随意磕碰。

2、伸缩蝶阀出厂时结构长度为最小长度，安装时，拉至安装长度（即设计长度）。

3、当管道间长度超过伸缩阀安装长度时，请调整管道间隔，切勿强行拉行伸缩阀，以免损坏伸缩阀。

4、伸缩蝶阀可在任意位置安装，做温度补偿用时，在管道安装完成后，需沿管道轴线方向两端加支架，防止伸缩阀伸缩管拉出（见图1），支架的支承力按下列公式计算，运行时严禁将支架卸掉。

$$F > \frac{\pi}{4} PS \cdot DN^2 \cdot (kgf)$$

式中：PS–管道试验压力， DN–管道直径

5、伸缩蝶阀不做温度补偿时，只做安装更换、维修阀门方便用时，可用通螺栓限位，对称夹紧伸缩蝶阀以防止伸缩管拉出(见图2)，损坏伸缩蝶阀及管道装置或建筑物。螺检直径可按照法兰螺栓直径，其螺栓强度和承受试验压力及管道拉力，按上公式进行计算，运行时限位螺栓严禁卸掉（螺栓另配）

6、管道施工现场严禁随意拆卸解体伸缩蝶阀。

7、本伸缩蝶阀，加工精细，配合严密，请勿在现场随意反复拉长压短伸缩蝶阀。管道安装时，要求伸缩阀两端管道必须同心，管道上的两法兰面要求平行。

8、法兰固定螺栓应对称紧固，请勿单边强行紧固法兰固定螺栓。

9、伸缩管安装在阀门后。

10、伸缩阀伸缩部分不得安装在管道拐角处或管道末端。

1.Telescopic butterfly valve should be placed horizontally before installation, any collision will be not allowed.

2.When telescopic butterfly valve left factory, its structure length is the minimum length,when installation should be pulled toinstallation length(Design length).

3.When length between pipes exceed telescopic valve installation length, please adjust the space between pipes, shouldn'tpull telescopic valve constrainedly,lest damage telescopic valve.

4.Telescopic butterfly valve can be installed in optional position, when it compensate temperature differential,after install pipe, it should be installed brackets on both sides of pipe axes direction, so as to prevent telescopic tube of telescopic valve from pulling out(see diagram1) , accumulate supporting force of bracket should be according to formula as below, and shouldn't unload bracket when delivery.

$$F > \frac{\pi}{4} PS \cdot DN^2 \cdot (kgf)$$

Formula note: PS–pipe test pressure ,DN–Diameter of pipe

5.When telescopic butterfly valve doesn' t treat as temperature compensation, only treat as install,exchange,and maintainvalve conveniently, it can use screw to retain, clamping telescopic butterfly valve symmetrically, so as to avoid telescopictube being pulled out(see diagram 2), and damage telescopic butterfly valve and pipe fitting or construction. Diameter of bolt canaccording to diameter of flange bolt,accumulate bolt intensity and bearing pressure test and pull of pipe according to above formula,when operation,retaining screw should not be unloaded(mate in addition)

6.On pipe constructive spot where remove or disassembly telescopic butterfly valve will be not allowed.

7.This kind of telescopic butterfly valve has been machining and fitting strictly,don't pull and press it from tine to time optionallyon spot. When install pipe , both pipe ends of telescopic valve should be homocentric, both facing flanges should be horizontal.

8.Fixed bolt on flange should be symmetrically and clamped ,shouldn't clamp fixed bolt of flange constrainedly on single side.

9.Telescopic tube should be installed behind of valve.

10.Telescopic part of telescopic valve shouldn't be installed on corner or end of pipe.

www.cv3000.com

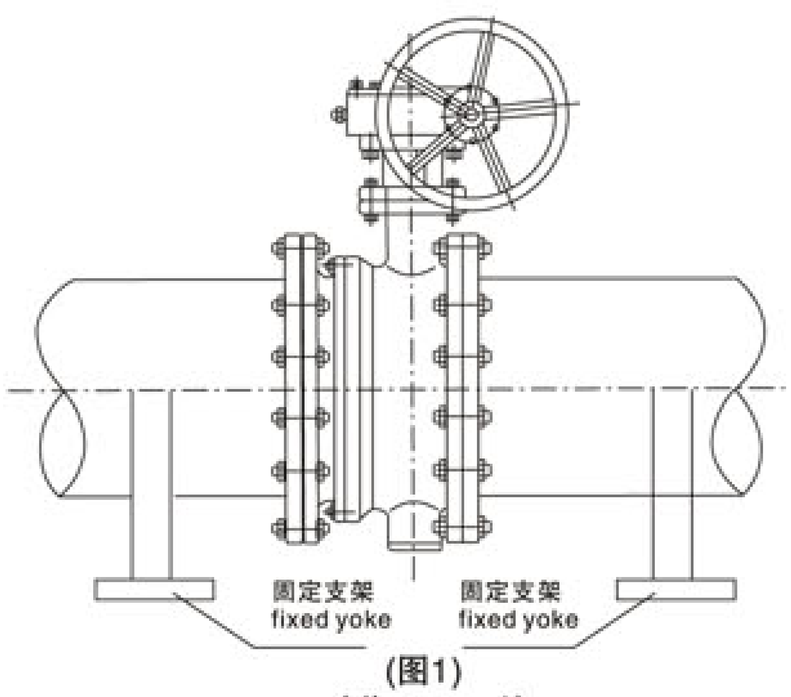

(图1)
(diagram 1)

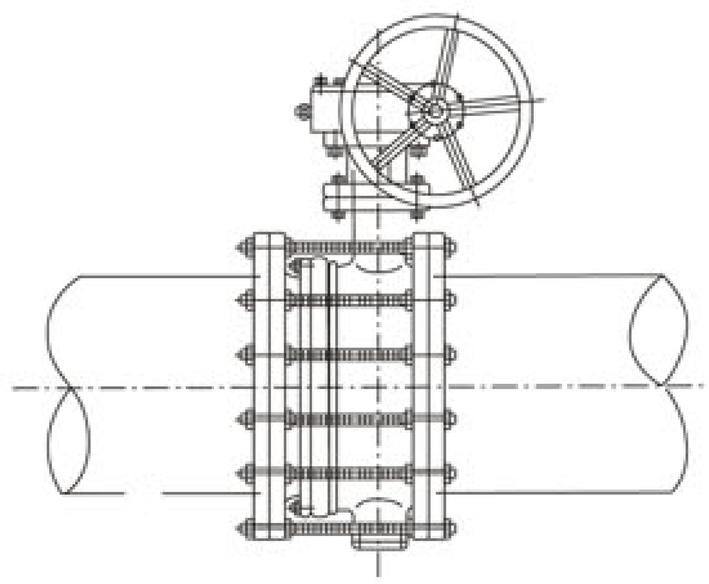

(图2)
(diagram 2)

性能规范 Property specification

用途及特点 Purpose and characteristic

软密封蝶阀适用于温度≤120℃，公称压力≤1.6MPa的食品、医药、化工、石油、电力、轻纺、造纸等给排水、气体管道上作调节流量和截流介质的作用。其主要特点为：

1、设计新颖、合理，结构独特，重量轻，启闭迅速。

2、操作力矩小，操作方便，省力灵巧。

3、可以任何位置安装、维修方便。

4、密封件可以更换，密封性能可靠达到双向密封零泄漏。

5、密封材料耐老化、耐腐蚀，使用寿命长等特点。

Soft sealing butterfly valve is suitable for applying in water supply & drainage and gas pipeline of foodstuff, pharmacy, petrochemical, petroleum, electric power, light textile, paper making and etc. industries to adjust and cut off flux when temperature ≤80℃ and nominal pressure≤1.6MPa. Main characteristics below:

1. Novel & reasonable design, special structure, light and rapidly start & stop.
2. Tiny operative moment, convenient & skilful operation.
3. Installation in any position, easy to maintain.
4. Renewable sealing component and reliable sealing property that seal in double direction with zero leakage.
5. Aging resisting, antisepsis and durable service life of sealing material.

设计、制造标准 Standard for design and manufacture

设计标准: GB/T1223 8-1989 Design standard: GB/T1223 8-1989

法兰连接尺寸: GB/T9113 .1-2000, G B/T9115. 1-2000, JB78 Flange connection dimension: GB/T9113 .1-2000, G B/T9115. 1-2000, JB78

结构长度: GB/1222 1-1989 Structure length: GB/1222 1-1989

压力试验: GB/T1392 7-1992, JB/T909 2-1999 Pressure test: GB/T1392 7-1992, JB/T909 2-1999

三千控制阀网 www.cv3000.com

主要技术参数 Main technical parameter

公称通径 Nominal diameter	DN(mm)	50~2000		
公称压力 Nominal pressure	PN(MPa)	0.6	1.0	1.6
试验压力 Ps(MPa) Test pressure	强度试验 Strength test	0.9	1.5	2.4
	密封试验 Seal test	0.66	1.1	1.76
	气密封试验 Gas seal test	0.6	0.6	0.6
适用介质 Applicable medium	空气、水、污水、蒸气、煤气、油品等。Air、water、sewage、steam、coal gas、oil goods and etc.			
驱动形式 Driving mode	手动、蜗杆蜗轮传动、气传动、电传动。Hand drive、worm wheel drive、pneumatic drive、electric drive.			

主要零件材料：Materials for main parts

零件名称 Part name	材 料Material
阀体 Body	球墨铸钢、铸钢、合金钢、不锈钢 Ductile cast steel、cast steel、alloy steel、stainless steel
蝶板 Disc	灰铸铁、球墨铸钢、铸钢、不锈钢及特殊材料 Gray cast iron、ductile cast steel、cast steel、stainless steel and special material
密封圈 Seal ring	各种橡胶、聚四氟乙烯 Manifold rubbers、PTFE
阀杆 Stem	2Cr13、不锈钢 2Cr13、stainless steel
填料 Packing	O型圈、柔性石墨 O-ring、flexible graphite

蝶阀密封材料选用和适用温度 Sealing materials for butterfly valve and applicable temperature

材料品种 Material type	氯丁橡胶 Neoprene	丁晴橡胶 Styrene rubber	乙丙橡胶 Ethylene propylene rubber	聚四氟乙烯 PTFE	硅橡胶 Silicon rubber	氟橡胶 Fluorine rubber
代号Code	X	J	YBX	F	GX	FJ
耐最高温度 Highest temperature resistance	82℃	93℃	150℃	232℃	250℃	204℃
耐最低温度 Lowest temperature resistance	-40℃	-40℃	-40℃	-268℃	-70℃	-23℃
适用工作温度 Applicalbe working temperature	≤65℃	≤80℃	≤120℃	≤200℃	≤200℃	≤180℃

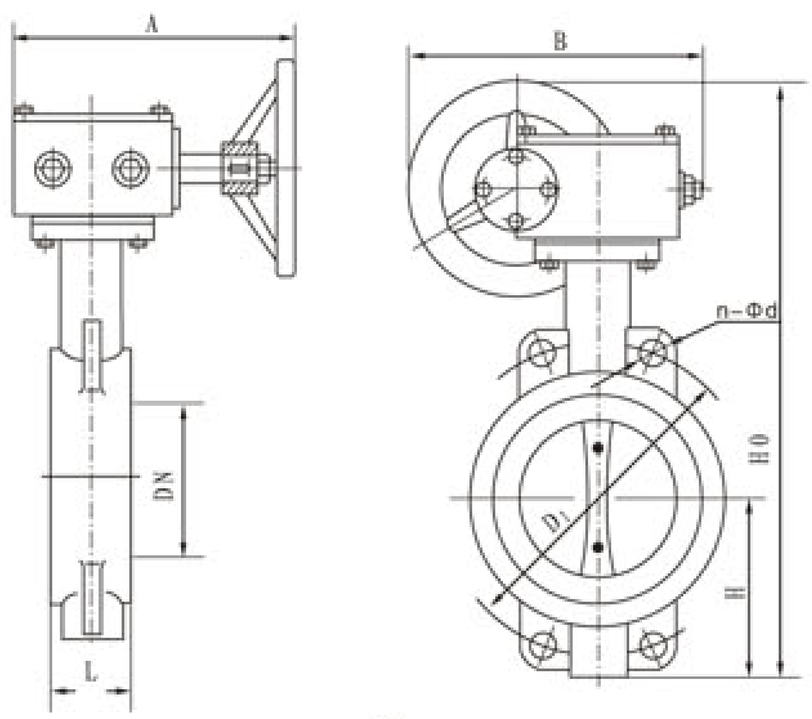

D371$^{X}_{J}$

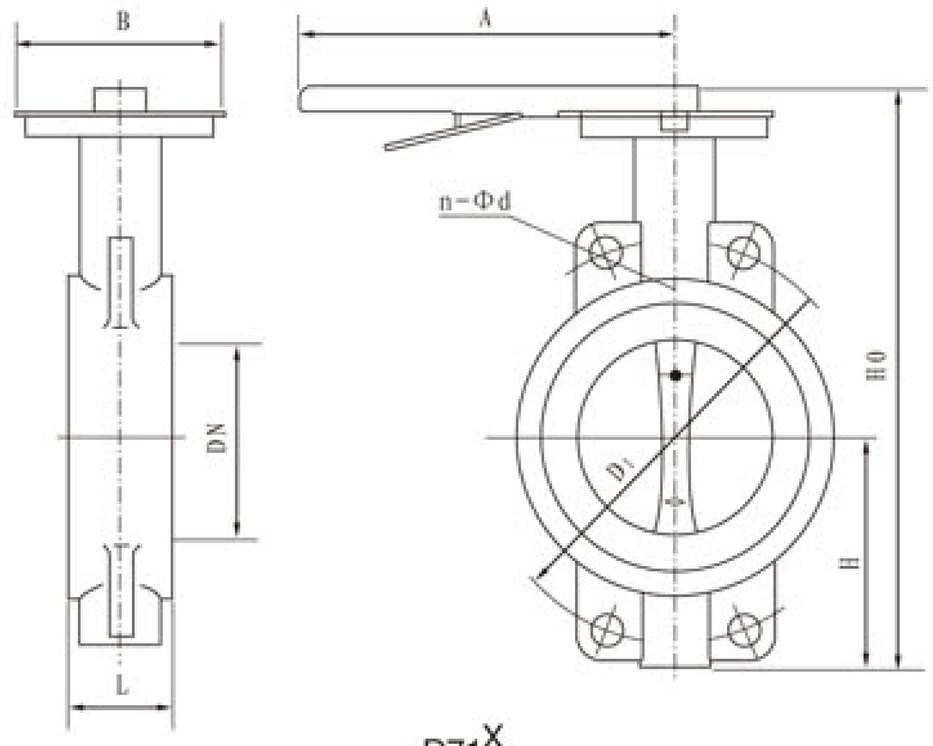

D71$^{X}_{J}$

D71$^{X}_{J}$主要连接及外形尺寸 Main connection and external dimensions(mm)

公称通径DN Nominal diameter		结构长度(标准值) Structure length (standard)	外形尺寸(参考值) External dimension(consult)				连接尺寸(标准值) Connection dimension(standard)					
							0.6MPa		1.0MPa		1.6MPa	
毫米mm	英寸inch	L	H	H0	A	B	D_1	n-Φd	D_1	n-Φd	D_1	n-Φd
50	2	43	63	235	270	65	110	4-Φ14	125	4-Φ18	125	4-Φ18
65	2 1/2	46	70	250	270	65	130	4-Φ14	145	4-Φ18	145	4-Φ18
80	3	46	83	275	270	65	150	4-Φ18	160	8-Φ18	160	8-Φ18
100	4	52	105	316	270	65	170	4-Φ18	180	8-Φ18	180	8-Φ18
125	5	56	115	340	310	65	200	8-Φ18	210	8-Φ18	210	8-Φ18
150	6	56	137	376	310	65	225	8-Φ18	240	8-Φ22	240	8-Φ22

三千控制阀网 www.cv3000.com

D371$^{X}_{J}$主要连接及外形尺寸 Main connection and external dimensions(mm)

公称通径DN Nominal diameter		结构长度(标准值) Structure length (standard)	外形尺寸(参考值) External dimension(consult)				连接尺寸(标准值) Connection dimension(standard)					
							0.6MPa		1.0MPa		1.6MPa	
毫米mm	英寸inch	L	H	H_1	A	B	D_1	n-d	D_1	n-Φd	D_1	n-Φd
50	2	43	63	306	180	200	110	4-Φ14	125	4-Φ18	125	4-Φ18
65	2 1/2	46	70	321	180	200	130	4-Φ14	145	4-Φ18	145	4-Φ18
80	3	46	83	346	180	200	150	4-Φ18	160	8-Φ18	160	8-Φ18
100	4	52	105	387	180	200	170	4-Φ18	180	8-Φ18	180	8-Φ18
125	5	56	115	411	180	200	200	8-Φ18	210	8-Φ18	210	8-Φ18
150	6	56	137	447	270	280	225	8-Φ18	240	8-Φ22	240	8-Φ22
200	8	60	164	572	270	280	280	8-Φ18	295	8-Φ22	295	12-Φ22
250	10	68	206	646	270	280	335	12-Φ18	350	12-Φ22	355	12-Φ26
300	12	78	230	738	380	420	395	12-Φ22	400	12-Φ22	410	12-Φ26
350	14	78	248	761	380	420	445	12-Φ22	460	16-Φ22	470	16-Φ26
400	16	102	289	877	450	470	495	16-Φ22	515	16-Φ26	525	16-Φ30
450	18	114	320	938	480	490	550	16-Φ22	565	20-Φ26	585	20-Φ30
500	20	127	343	993	480	490	600	20-Φ22	620	20-Φ26	650	20-Φ33
600	24	154	413	1131	480	490	705	20-Φ26	725	20-Φ30	770	20-Φ36
700	28	165	478	1476	640	660	810	24-Φ26	840	24-Φ30	840	24-Φ36
800	32	190	525	1533	640	660	920	24-Φ30	950	24-Φ33	950	24-Φ39
900	36	203	585	1655	750	860	1020	24-Φ30	1050	28-Φ33	1050	28-Φ39
1000	40	216	640	1765	850	900	1120	28-Φ30	1160	28-Φ36	1170	28-Φ42
1200	48	254	755	1995	850	900	1340	32-Φ33	1380	32-Φ39	1390	32-Φ48
1400	56	279	910	2310	1000	925	1560	36-Φ36	1590	36-Φ42	1590	36-Φ48
1600	64	318	1030	2595	1000	925	1760	40-Φ36	1820	40-Φ48	1820	40-Φ55
1800	72	356	1140	2810	1100	980	1970	44-Φ39	2020	44-Φ48	2020	44-Φ55
2000	80	406	1250	3100	1100	980	2180	48-Φ42	2230	48-Φ48	2230	48-Φ60

注：若用户需用阀板衬橡胶等特殊要求，订货时请注明。
Note: If customer has any special requirements for disc with rubber lining and etc.please specify while ordering.

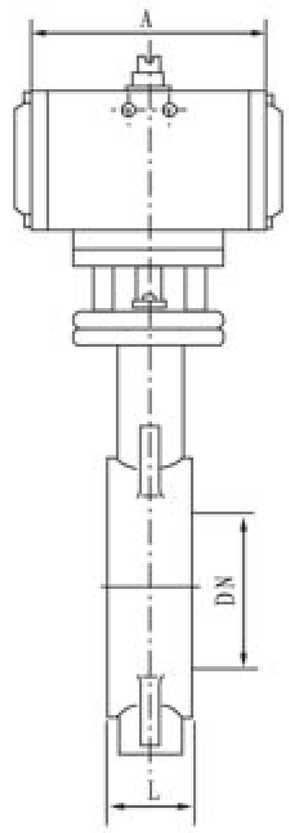

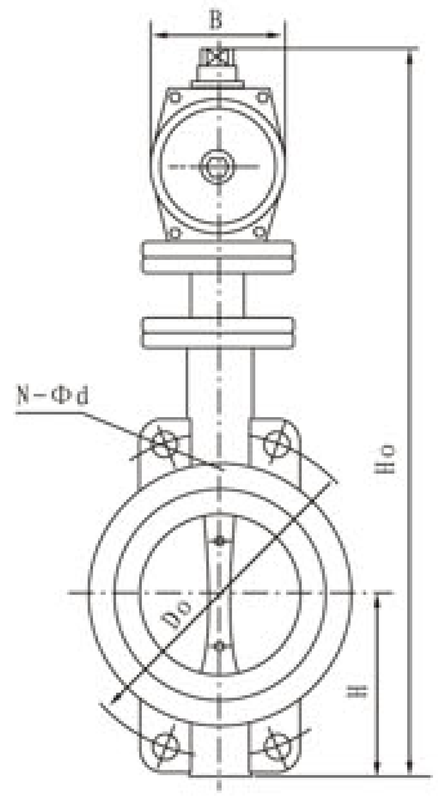

主要连接及外形尺寸 Main connection and external dimensions(mm)

公称通径DN Nominal diameter		结构长度(标准值) Structure length (standard)	外形尺寸(参考值) External dimension(consult)				连接尺寸(标准值) Connection dimension(standard)					
							0.6MPa		1.0MPa		1.6MPa	
毫米mm	英寸inch	L	H	H0	A	B	D0	n-Φd	D0	N-Φd	D0	n-Φd
50	2	43	63	315	180	65	110	4-Φ14	125	4-Φ18	125	4-Φ18
65	2 1/2	46	70	330	180	65	130	4-Φ14	145	4-Φ18	145	4-Φ18
80	3	46	83	390	245	72	150	4-Φ18	160	8-Φ18	160	8-Φ18
100	4	52	105	431	240	72	170	4-Φ18	180	8-Φ18	180	8-Φ18
125	5	56	115	455	240	72	200	8-Φ18	210	8-Φ18	210	8-Φ18
150	6	56	137	626	350	93	225	8-Φ18	240	8-Φ22	240	8-Φ22
200	8	60	164	720	350	93	280	8-Φ18	295	8-Φ22	295	12-Φ22
250	10	68	206	800	550	350	335	12-Φ18	350	12-Φ22	355	12-Φ26
300	12	78	230	860	600	350	395	12-Φ22	400	12-Φ22	410	12-Φ26
350	14	78	248	883	600	350	445	12-Φ22	460	16-Φ22	470	16-Φ26
400	16	102	289	972	600	350	495	16-Φ22	515	16-Φ26	525	16-Φ30
450	18	114	320	1043	750	380	550	16-Φ22	565	20-Φ26	585	20-Φ30
500	20	127	343	1098	750	380	600	20-Φ22	620	20-Φ26	650	20-Φ33
600	24	154	413	1236	750	380	705	20-Φ26	725	20-Φ30	770	20-Φ36
700	28	165	478	1431	750	380	810	24-Φ26	840	24-Φ30	840	24-Φ36
800	32	190	525	1488	750	380	920	24-Φ30	950	24-Φ33	950	24-Φ39
900	36	203	620	1615	1250	380	1020	24-Φ30	1050	28-Φ33	1050	28-Φ39
1000	40	216	725	1765	1500	580	1120	28-Φ30	1160	28-Φ36	1170	28-Φ42
1200	48	254	780	1976	1500	580	1340	32-Φ33	1380	32-Φ39	1390	32-Φ48

三千控制阀网 www.cv3000.com

注：若用户需用阀板衬橡胶等特殊要求，订货时请注明。
Note: If customer has any special requirements for disc with rubber lining and etc.please specify while ordering.

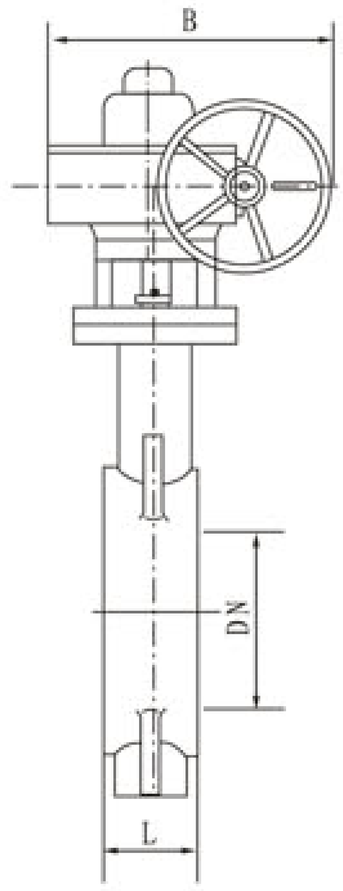

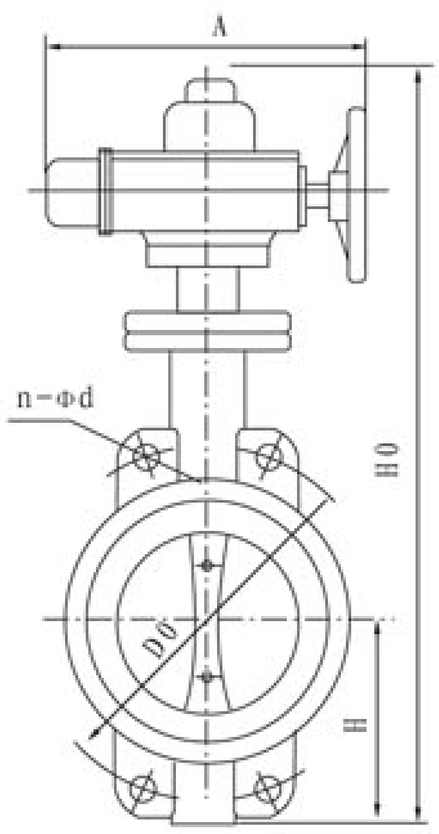

主要连接及外形尺寸 Main connection and external dimensions(mm)

公称通径DN Nominal diameter		结构长度(标准值) Structure length (standard)	外形尺寸(参考值) External dimension(consult)				连接尺寸(标准值) Connection dimension(standard)					
							0.6MPa		1.0MPa		1.6MPa	
毫米mm	英寸inch	L	H	H0	A	B	D0	n-Φd	Do	n-Φd	D0	n-Φd
50	2	43	63	438	125	125	110	4-Φ14	125	4-Φ18	125	4-Φ18
65	2 1/2	46	70	453	125	125	130	4-Φ14	145	4-Φ18	145	4-Φ18
80	3	46	83	478	125	125	150	4-Φ18	160	8-Φ18	160	8-Φ18
100	4	52	105	519	125	125	170	4-Φ18	180	8-Φ18	180	8-Φ18
125	5	56	115	713	325	245	200	8-Φ18	210	8-Φ18	210	8-Φ18
150	6	56	137	749	325	245	225	8-Φ18	240	8-Φ22	240	8-Φ22
200	8	60	164	843	325	245	280	8-Φ18	295	8-Φ22	295	12-Φ22
250	10	68	206	947	363	313	335	12-Φ18	350	12-Φ22	355	12-Φ26
300	12	78	230	1013	363	313	395	12-Φ22	400	12-Φ22	410	12-Φ26
350	14	78	248	1046	363	313	445	12-Φ22	460	16-Φ22	470	16-Φ26
400	16	102	289	1135	363	313	495	16-Φ22	515	16-Φ26	525	16-Φ30
450	18	114	320	1328	465	439	550	16-Φ22	565	20-Φ26	585	20-Φ30
500	20	127	343	1226	546	431	600	20-Φ22	620	20-Φ26	650	20-Φ33
600	24	154	413	1394	546	556	705	20-Φ26	725	20-Φ30	770	20-Φ36
700	28	165	478	1534	546	556	810	24-Φ26	840	24-Φ30	840	24-Φ36
800	32	190	525	1659	546	556	920	24-Φ30	950	24-Φ33	950	24-Φ39
900	36	203	585	1748	617	706	1020	24-Φ30	1050	28-Φ33	1050	28-Φ39
1000	40	216	640	1805	632	706	1120	28-Φ30	1160	28-Φ36	1170	28-Φ42
1200	48	254	755	2035	632	706	1340	32-Φ33	1380	32-Φ39	1390	32-Φ48
1400	56	279	910	2310	790	1338	1560	36-Φ36	1590	36-Φ42	1590	36-Φ48
1600	64	318	1030	2845	868	1476	1760	40-Φ36	1820	40-Φ48	1820	40-Φ55
1800	72	356	1140	3060	868	1476	1970	44-Φ39	2020	44-Φ48	2020	44-Φ55
2000	80	406	1250	3350	965	1600	2180	48-Φ42	2230	48-Φ48	2230	48-Φ60

注：若用户需用阀板衬橡胶等特殊要求，订货时请注明。
Note: If customer has any special requirements for disc with rubber lining and etc.please specify while ordering.

三千控制阀网 www.cv3000.com

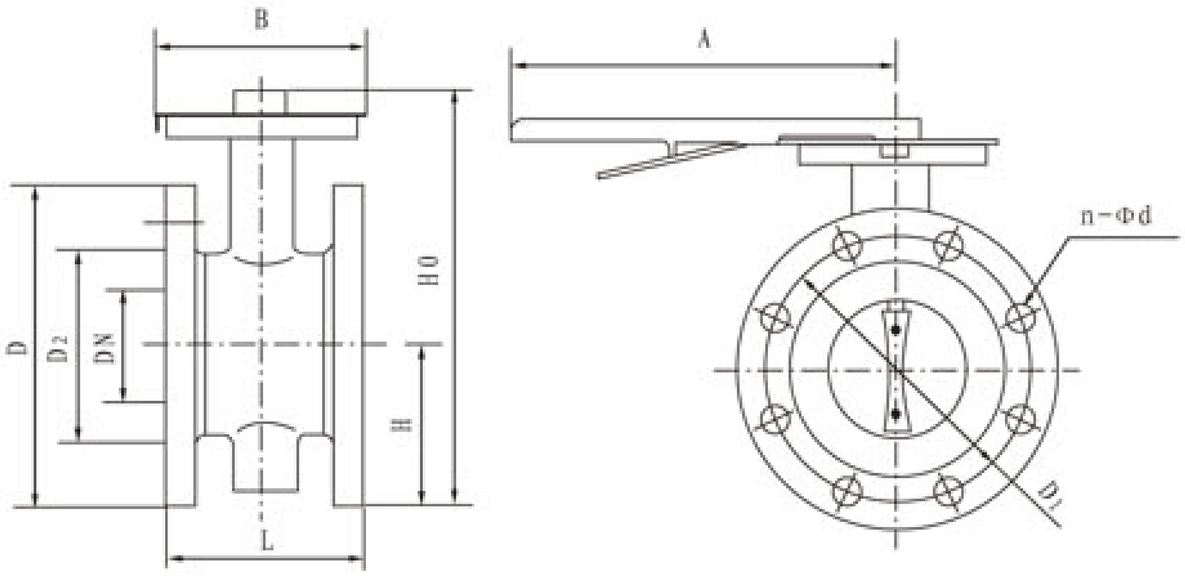

D41

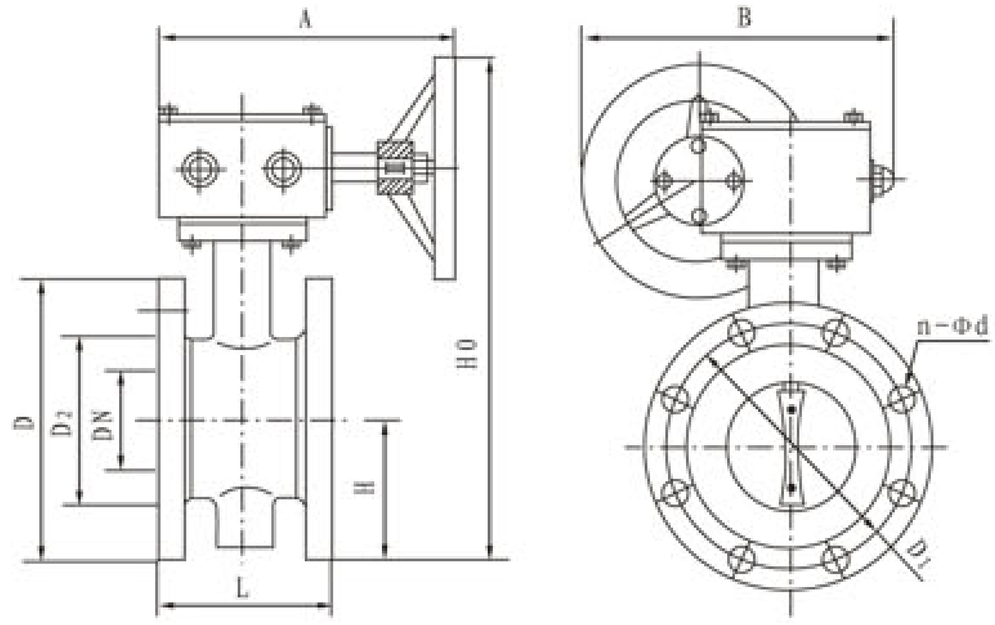

D341

D41X/J 6/16 -10 Z.Q.C.P.R系列主要连接及外形尺寸 Main connection and external dimensions(mm)

公称通径DN Nominal diameter		结构长度(标准值) Structure length (standard)	外形尺寸(参考值) External dimension (consult)				连接尺寸(标准值) Connection dimension(standard)												参考重量 (kg) Consult weight
							0.6MPa				1.0MPa				1.6MPa				
毫米mm	英寸inch	L	H	H0	A	B	D	D1	D2	n-Φd	D	D1	D2	n-Φd	D	D1	D2	n-Φd	
50	2	108	82.5	238	270	65	140	110	88	4-14	165	125	99	4-18	165	125	99	4-18	8.5
65	2 1/2	112	92.5	258	270	65	160	130	108	4-14	185	145	118	4-18	185	145	118	4-18	9.5
80	3	114	100	278	270	65	190	150	124	4-18	200	160	132	8-18	200	160	132	8-18	11
100	4	127	110	293	270	65	210	170	144	4-18	220	180	156	8-18	220	180	156	8-18	15
125	5	140	125	309	310	65	240	200	174	8-18	250	210	184	8-18	250	210	184	8-18	21
150	6	140	142.5	336	310	65	265	225	199	8-18	285	240	211	8-22	285	240	211	8-22	24

上海明珠阀门制造有限公司
www.cv3000.com

D341X/J 6/16 -10 Z.Q.C.P.R系列主要连接及外形尺寸 Main connection and external dimensions(mm)

公称通径DN Nominal diameter		结构长度(标准值) Structure length (standard)	外形尺寸(参考值) External dimension (consult)				连接尺寸(标准值) Connection dimension(standard)												参考重量 (kg) Consult weight
							0.6MPa				1.0MPa				1.6MPa				
毫米mm	英寸inch	L	H	H0	A	B	D	D1	D2	n-Φd	D	D1	D2	n-Φd	D	D1	D2	n-Φd	
50	2	108	63	306	180	200	140	110	88	4-14	165	125	99	4-18	165	125	99	4-18	13
65	2 1/2	112	70	321	180	200	160	130	108	4-14	185	145	118	4-18	185	145	118	4-18	14
80	3	114	83	346	180	200	190	150	124	4-18	200	160	132	8-18	200	160	132	8-18	15.5
100	4	127	105	387	180	200	210	170	144	4-18	220	180	156	8-18	220	180	156	8-18	19.5
125	5	140	115	411	180	200	240	200	174	8-18	250	210	184	8-18	250	210	184	8-18	25.5
150	6	140	137	447	270	280	265	225	199	8-18	285	240	211	8-22	285	240	211	8-22	28.5
200	8	152	164	572	270	280	320	280	254	8-18	340	295	266	8-22	340	295	266	12-22	48
250	10	165	206	646	270	280	375	335	309	12-18	395	350	319	12-22	405	355	319	12-26	69
300	12	178	230	738	380	420	440	395	363	12-22	445	400	370	12-22	460	410	370	12-26	91
350	14	190	248	761	380	420	490	445	413	12-22	505	460	429	16-22	520	470	429	16-26	110
400	16	216	289	877	450	470	540	495	463	16-22	565	515	480	16-26	580	525	480	16-30	140
450	18	222	320	938	480	490	595	550	518	16-22	615	565	530	20-26	640	585	548	20-30	180
500	20	229	343	993	480	490	645	600	568	20-22	670	620	582	20-26	715	650	609	20-33	215
600	24	267	413	1131	480	490	755	705	667	20-26	780	725	682	20-30	840	770	720	20-36	290
700	28	292	478	1476	640	660	860	810	772	24-26	895	840	794	24-30	910	840	794	24-36	560
800	32	318	525	1533	640	660	975	920	878	24-30	1015	950	901	24-33	1025	950	901	24-39	910
900	36	330	585	1655	750	860	1075	1020	978	24-30	1115	1050	1001	28-33	1125	1050	1001	28-39	1500
1000	40	410	640	1765	850	900	1175	1120	1078	28-30	1230	1160	1112	28-36	1255	1170	1112	28-42	1750
1200	48	470	755	1995	850	900	1405	1340	1295	32-33	1455	1380	1328	32-39	1485	1390	1328	32-48	2180
1400	56	530	910	2310	1000	925	1630	1560	1510	36-36	1675	1590	1530	36-42	1685	1590	1530	36-48	2400
1600	64	600	1030	2595	1000	925	1830	1760	1710	40-36	1915	1820	1750	40-48	1930	1820	1750	40-55	2870
1800	72	670	1140	2810	1100	980	2045	1970	1918	44-39	2115	2020	1950	44-48	2130	2020	1950	44-55	3380
2000	80	760	1250	3100	1100	980	2265	2180	2125	48-42	2325	2230	2150	48-48	2345	2230	2150	48-60	4010

注：若用户需用阀板衬橡胶等特殊要求，订货时请注明。
Note: If customer has any special requirements for disc with rubber lining and etc.please specify while ordering.

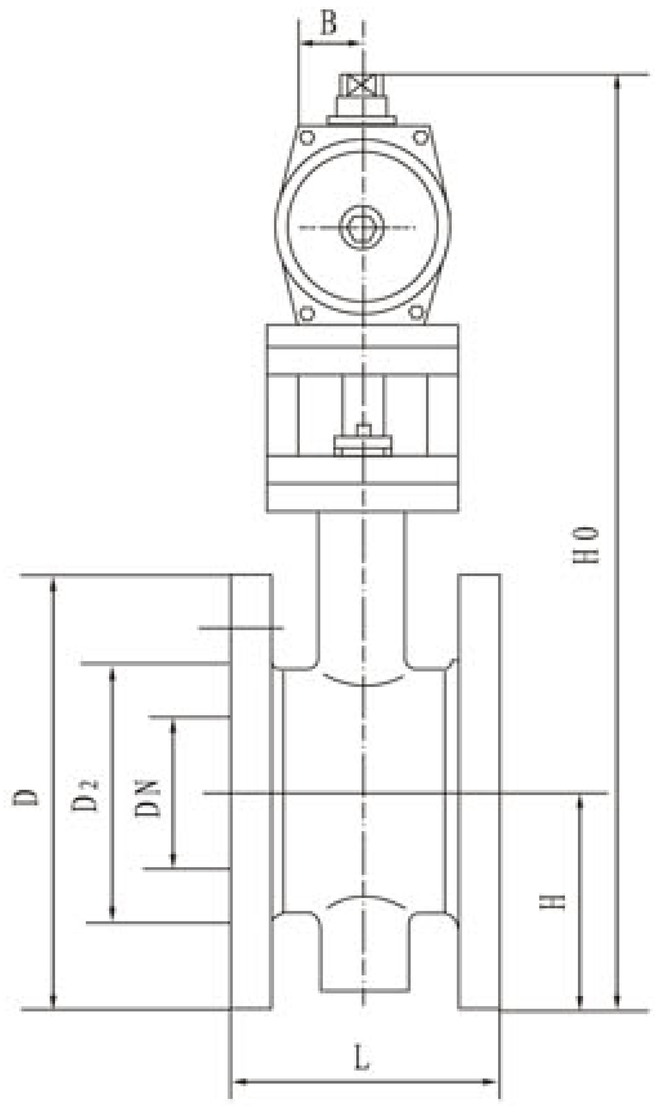

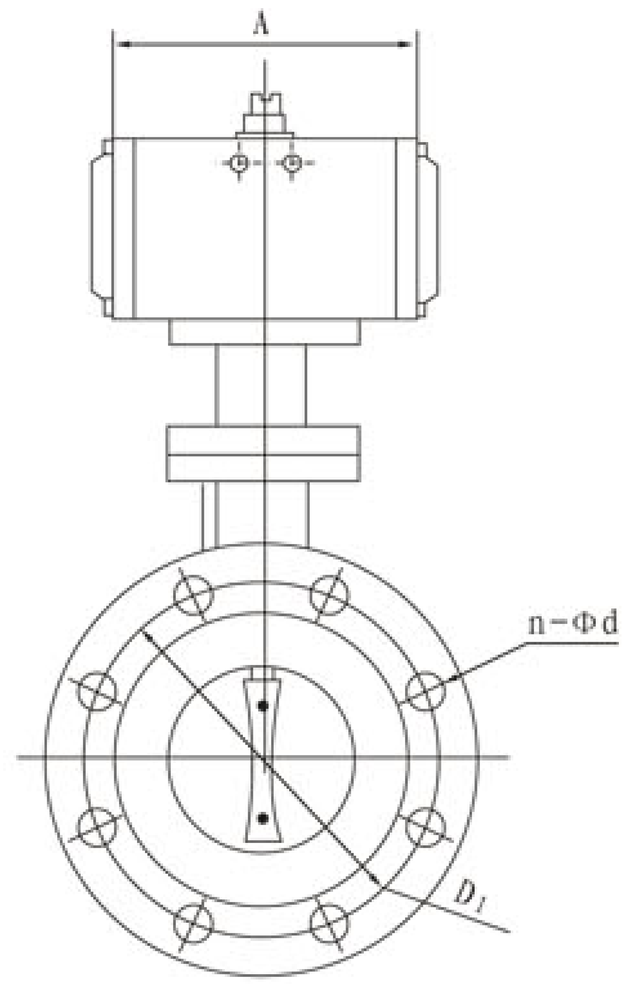

D641X/J-6/10/16 Z.Q.C.P.R系列主要连接及外形尺寸 Main connection and external dimensions(mm)

二十控制阀网 www.cv3000.com

公称通径DN Nominal diameter		结构长度(标准值) Structure length (standard)	外形尺寸(参考值) External dimension (consult)				连接尺寸(标准值) Connection dimension(standard)												参考重量 (kg) Consult weight
							0.6MPa				1.0MPa				1.6MPa				
毫米mm	英寸inch	L	H	H0	A	B	D	D1	D2	n-Φd	D	D1	D2	n-Φd	D	D1	D2	n-Φd	
50	2	108	82.5	338	180	65	140	110	88	4-14	165	125	99	4-18	165	125	99	4-18	14
65	2 1/2	112	92.5	358	180	65	160	130	108	4-14	185	145	118	4-18	185	145	118	4-18	16
80	3	114	100	413	245	72	190	150	124	4-18	200	160	132	8-18	200	160	132	8-18	17
100	4	127	110	428	240	72	210	170	144	4-18	220	180	156	8-18	220	180	156	8-18	21
125	5	140	125	444	240	72	240	200	174	8-18	250	210	184	8-18	250	210	184	8-18	27
150	6	140	142.5	553	350	93	265	225	199	8-18	285	240	211	8-22	285	240	211	8-22	29
200	8	152	170	678	350	93	320	280	254	8-18	340	295	266	8-22	340	295	266	12-22	50
250	10	165	197.5	742	550	350	375	335	309	12-18	395	350	319	12-22	405	355	319	12-26	69
300	12	178	222.5	803	600	350	440	395	363	12-22	445	400	370	12-22	460	410	370	12-26	91
350	14	190	252.5	866	600	350	490	445	413	12-22	505	460	429	16-22	520	470	429	16-26	110
400	16	216	282.5	940	600	350	540	495	463	16-22	565	515	480	16-26	580	525	480	16-30	138
450	18	222	307.5	995	750	380	595	550	518	16-22	615	565	530	20-26	640	585	548	20-30	175
500	20	229	335	1058	750	380	645	600	568	20-22	670	620	582	20-26	715	650	609	20-33	210
600	24	267	390	1163	750	380	755	705	667	20-26	780	725	682	20-30	840	770	720	20-36	275
700	28	292	447.5	1283	750	380	860	810	772	24-26	895	840	794	24-30	910	840	794	24-36	530
800	32	318	507.5	1398	750	380	975	920	878	24-30	1015	950	901	24-33	1025	950	901	24-39	590
900	36	330	557.5	1498	1250	380	1075	1020	978	24-30	1115	1050	1001	28-33	1125	1050	1001	28-39	1400
1000	40	410	615	1608	1500	580	1175	1120	1078	28-30	1230	1160	1112	28-36	1255	1170	1112	28-42	1650
1200	48	470	727.5	1876	1500	580	1405	1340	1295	32-33	1455	1380	1328	32-39	1485	1390	1328	32-48	2140

注：若用户需用阀板衬橡胶等特殊要求，订货时请注明。
Note: If customer has any special requirements for disc with rubber lining and etc.please specify while ordering.

蝶阀型号编制说明: Butterfly valve model compiling specification:

D d L 9 4 I X - 10 C DN

公称通径 Nominal diameter：DN2000mm

阀体材质：Z-铸铁、Q-球墨铸铁、NC-镍铬铸铁、C-碳钢、P-不锈钢、R-镍铬不锈钢
Body material: Z-cast iron、Q-Nodular cast iron、NC-Ni.Cr. cast iron、C-carbon steel、P-stainless steel、R-Ni.Cr stainless steel

公称压力 Nominal pressure：0.25Mpa~4.0Mpa

密封材料：X 橡胶、J 丁晴橡胶、F 聚四氟乙烯、H 合金钢（硬密封）
Seal material: X rubber、J styrene rubber、FPTFE、H alloy steel(hard seal)

结构形式：1-垂直板式、3-斜板式、0-杠杆式
Structure type: 1-vertical plate type、3-inclined plate type、0-lever type

连接方式：4-法兰式 Connection type:4-flange

传动形式：2-电液动、3-蜗轮、4-正齿轮、5-伞齿轮、6-气动、7-液动、9-电动
Driving mode: 2-electro-hydraulic、3-worm gear、4-spur gear、5-bevel gear、6-pneumatic、7-hydraulic 、9-electric

安装形式：W-卧式、L-立式(不注明W、L为无底脚) Installation type: W-horizontal、L-vertical (No bottom brace except specify)

外形代号：d-短系列 External code: d-short series

类型:蝶阀 Valve type: Butterfly valve

例:如用户选型蝶阀-D、短系列-d、立式-L、电动-9、法兰式-4、垂直式-1、橡胶密封-X、压力6、材质铸铁可以不加Z、通径为2000mm选出的型号为：DdL941X-6 DN2000

Example: If user chooses the type like below: butterfly-D、short series-d、vertical type-L、 flange-4、vertical-1、rubber-sealing-X、pressure-6、cast iron material (may omit Z)、diameter of 2000mm,then the corresponding model is: DdL941X-6 DN2000.

三千控制阀网 www.cv3000.com

设计、制造标准

1、阀门设计、制造符合GB/T 12238-89，同时也符合ISO10631-94或BS EN593-98标准。

2、法兰连接尺寸符合GB/T 17241.6-98，同时也符合ISO7005-2或BS PrEN1092-2标准。

3、阀门结构长度符合GB/T 12221-89对夹式蝶阀结构长度，同时也符合ISO5752-88或 BS EN558-1标准。

4、阀门压力试验按照GB/T 13972-92，也可按照ISO5208-93或BS6755-I-86或AWWAC 504-94验收。

Standard for Design and Manufacture:

1、The valve is designed and manufactured according to Standards GB/T 12238-89 and ISO10631-94 or BS EN 593-98.

2、Flange connection dimension is according to Standards GB/T 17241.6-98 and ISO7005-2 or BS PrEN1092-2.

3、Face-to-face dimension of valve is according to Standards GB/T 12221-89 and ISO5752-88 or BS EN558-1.

4、Pressure testing is according to Standards GB/T 13927-92 and ISO5208-93 or BS6755-1-86AWWAC504-94.

主要零件材料：Materials for main parts

零件名称 part name	材料名称 Material name		
	短系列蝶阀 Short series butterfly valve	（涂料型）短系列耐海水蝶阀 (Coating type)Short series sea-water resisting butterfly valve	（合金钢）短系列耐海水蝶阀 (alloy steel)Short series sea-water resisting butterfly valve
阀体 Body	灰铸铁或球墨铸铁 Gray or nodular cast iron	灰铸铁或球墨铸铁 Gray or nodular cast iron	铬镍合金铸铁 Cr.Ni.alloy cast iron
蝶板 Disc	球墨铸铁 Nodular cast iron	球墨铸铁 Nodular cast iron	铬镍合金铸铁 Cr.Ni.alloy cast iron
阀体密封圈 Body sealing ring	不锈钢 Stainless steel	不锈钢 Stainless steel	不锈钢 Stainless steel
阀轴 Valve axle	不锈钢 Stainless steel	不锈钢 Stainless steel	不锈钢 Stainless steel
蝶板密封圈 Disc sealing ring	丁晴橡胶 Styrene rubber	天然橡胶 Natural rubber	天然橡胶 Natural rubber

软密封蝶阀

1、用途

该短系列蝶阀广泛适用于电力、冶金、市政等行业给、排水管道系统中，作截断或连通介质用。

2、特点

本产品主要由阀体、蝶板、阀轴、阀体密封圈、蝶板密封圈、驱动装置组成。具有以下主要特点：

1、本短系列蝶阀分环保型、常规型产品。

a、环保型产品，在阀腔内过水面采用对人身体健康安全无害环保型涂料，符合生活饮用水卫生标准，对管道中的介质不产生任何污染。

b、常规型产品，在阀腔内过水面采用附着力强的防腐锈涂料。

2、耐海水型短系列蝶阀分为涂料型及合金型两种。

a、涂料型耐海水系列蝶阀过流表面涂覆防涂料，其涂层坚，致密、光亮、附着力强、耐海水腐蚀性能稳定。

a、合金型耐海水系列蝶阀其阀体、蝶板材料均采用耐海水镍铬合金铸铁。耐海水型短系列蝶阀的阀轴、调节压板、过流表面的坚固件、连接件均采用不锈钢制作。

3、密封形式：不锈钢橡胶，并采用双偏心结构，故密封性能可靠，其渗漏量为零。

4、维修方便，密封圈磨损后可通过蝶板上的调节螺钉进行密封补偿调节。

5、使用的轴承采用无铅型无给油自润滑轴承，且承载能力强，耐磨性好，摩擦阻力小。

6、轴端封密采用自紧式等双重密封，密封效果好。

7、当口径＞800mm，为立式安装时该阀特设有防蝶板下坠可调装置，以保证阀门运行更可靠，使用寿命更长。

8、蝶板造形采用流线型设计，具有流阻系数小（0.2）等特点。

9、阀门强度、刚度好（常规型、环保型、耐海水涂料型）阀体强度试验可承受两倍公称压力。

10、该系列产品的外形新颖、美观。

3、工作原理

蜗轮（伞齿轮）短系列蝶阀，通过蜗轮、（伞齿轮）传动装置带动阀轴旋转，同时通过销轴带动蝶板在90° 范围内旋转，使蝶板处于开启或关闭状态，从而达到截断或连通介质的目的。

短系列管网蝶阀，通过启闭机构使锅轮、蜗杆（伞齿轮）转动并带动阀轴旋转，同时又通过销轴带动蝶板在90° 范围内旋转，使蝶板处于开启或关闭状态，从而达到截断或连通介质的目的。电动（快启闭）短系列蝶阀，通过电动装置使蜗轮、蜗杆（伞齿轮）转动并带动阀轴旋转，同时又通过销轴带动蝶板在90° 范围内旋转，使蝶板处于开启或关闭状态，从而达到截断或连通介质的目的。

设计、制造标准

1. 设计制造按GB/T 12238-89

2、法兰连接尺寸按GB/T 17241.6-98

3、阀门检查和试验按GB/T 13927-92

Standard for design and manufacture

1、Design Manafacfure According to GB/T 12238-89

2、Flange Dimension According to JB/T 17241.6-98

3、Valve Checkand Test According to GB/T 13927-92

Soft-Sealed Butterfly Valve

Ⅰ.Application:

The short series butterfly valves are widely used in the water supply and drainage pipe systems in the fields of electric power, metallurgy, municipality and so on, to cut off or connect the medium.

Ⅱ Characteristics:

The butterfly valves are mainly composed of body, disc, shaft, body seal ring, disc seal ring, driven device, etc. with the following characteristics:

1.The short series butterfly valves are divided into environmental protection type and conventional type.

a.Environmental protection type:The environmental protection coating,which is harmless to personal health, is adopted in the inside chamber,complying with the hygienic standard for drinking water,free from pollution to the medium in the pipe.

b.Conventional type: the anti-corrosion and anti-rust coating with strong adhesive force is adopted in the inside chamber.

2.Seawater resisting short series butterfly valves are divided into coating type and alloy type:

a.The surfaces for the medium to flow across of the coating type seawater resisting short series butterfly valves are coated with anti-corrosive paint. The coating is tough and tensile, fine, bright, with strong adhesive force and stable performance of seawater resistance.

b.The materials of both body and disc of the alloy type seawater resisting series butterfly valves are seawater resisting alloy cast iron of nickel and chromium. The shaft, seal retaining plate, the fasteners and the connection pieces of the surfaces for the medium to flow across are made from stainless steel.

3.Seal type: stainless to rubber, adopting double eccentric construction, with reliable seal performance and leakage of zero.

4.Its maintenance is convenient. After the seal ring is worn out, it can be compensated through the adjusting screw on the disc.

5.The used bearings are leadless and self - lubricated with the advantages of strong bearing capacity, good wear resistance and small frictional resistance.

6.The shaft end seal adopts self-tightening double seal with good seal effect.

7.When DN > 800mm and the valve is installed vertically, it's equipped with the adjustable device to prevent the disc from dropping, thus to ensure the valve runs reliably with long service life.

8.The disc is of streamline design with small flow resistance(< 0.2).

9.The strength and rigidity of the valve are good (conventional type, environmental protection type and seawater resisting type).The body test strength can bear 2 times of nominal pressure.

10.The appearances of the series valves are novel and beautiful.

Ⅲ.Working Principle:

For worm gear driven(bevel gear driven)short seriesbutterfly valve, the shaft is actuated by the worm gear (bevel gear)driving device to rotate. Meanwhile, the pin shaft drives the disc to rotate in the range of 90°,and then the disc is made to be in the opening or closing state, thus to cut off or connect the medium.

For short series pipeline butterfly valve, the headstock gear makes the worm gear(bevel gear)rotate and also drives the shaft to rotate. Mean while, the pin shaft drives the disc to rotate in the range of 90°, and then the disc is made to be in the opening or closing state, thus to cut off or connect the medium.

For electric (quick opening and closing) short series butterfly valve, the electric actuator makes the worm gear (bevel gear) rotate and also drives the shaft to rorate.Meanwhile, the pin shaft drives the disc to rotate in the range of 90°, and then the disc is made to be in the opening or closing state,thus to cut off or connect the medium.

三千控制阀网 www.cv3000.com

Ddw341XL-0.25、0.6、1.0
Ddw941XL-0.25、0.6、1.0
Ddw341X-0.25、0.6、1.0
Ddw941X-0.25、0.6、1.0

短系列卧式法兰蝶阀
SHORT SERIES VERTICAL TYPE FLANGE BUTTERFLY VALVE

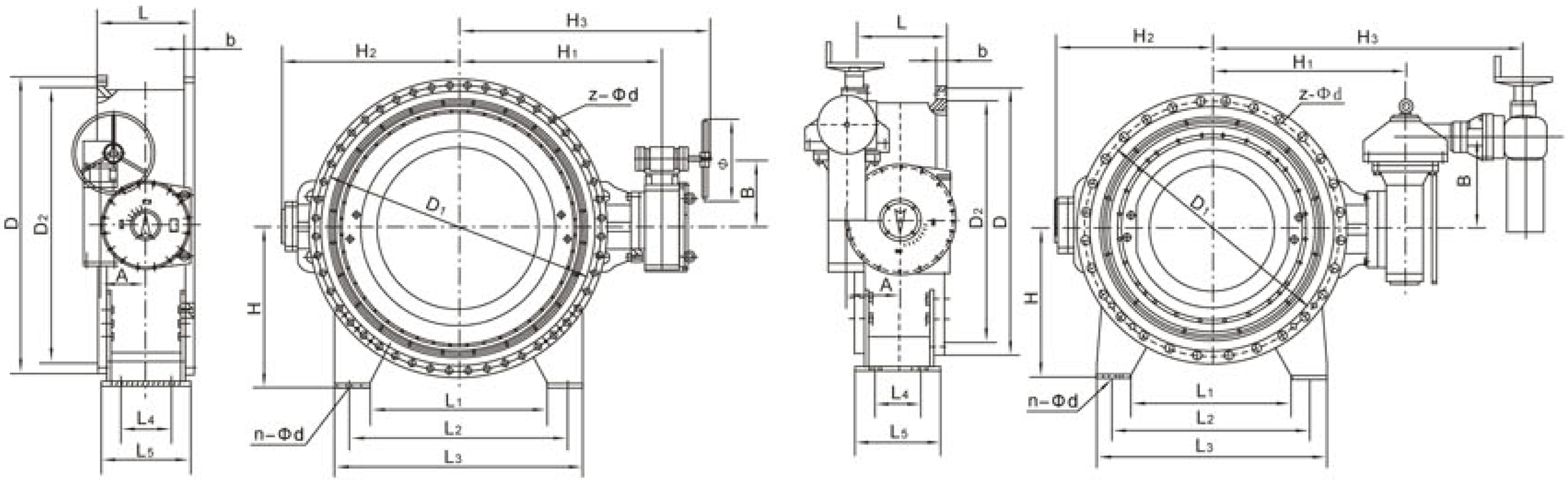

主要连接及外形尺寸 Main connection and external dimensions(mm)

通径 Diameter DN	蝶阀外形及底脚连接尺寸 External and bottom brace connecting dimension of butterfly											Ddw341X			Ddw941X		
	L	H	H1	H2	H3	L1	L2	L3	L4	L5	n-Φd	D0	A	B	A	B	开启时间 Open time
400	140	340	282	366			410				2-Φ22	350	128	234			
450	152	370	307	391			450				2-Φ22	350	128	234			
500	152	400	335	416			490				2-Φ22	400	223	273			
600	178	460	390	466			565				2-Φ26	400	223	273	155	403	63
700	229	540	447	520	1183	520	640	760		210	2-Φ26	400	223	373	207	438	71
800	241	580	507	590	1372	580	740	900		220	2-Φ30	二级传动	435	360	207	438	71
900	241	635	793	665	1430	666	820	950		220	2-Φ30	500	580	380	207	438	71
1000	300	690	843	718	1562	728	900	1040	130	280	4-Φ30	500	580	380	246	416	123
1200	360	810	1015	855	1630	868	1070	1240	160	300	4-Φ30	600	580	380	246	416	123
1400	390	920	1152	1000	1734	1000	1230	1430	180	320	4-Φ36	600	690	430	328	503	129
1600	440	1040	1282	1150	1979	1130	1400	1620	220	340	4-Φ36	600	690	430	360	537	129
1800	490	1140	1466	1240	1884	1250	1550	1800	260	390	4-Φ39	600	820	550	432	602	129
2000	540	1250	1586	1380	1980	1380	1700	1980	290	400	4-Φ42	600	820	550	432	602	300
2200	590	1360	1740	1520	2190	1550	1870	2190	330	425	4-Φ42	600	1020	780	560	690	300
2400	650	1480	1840	1650	2390	1610	2030	2390	385	485	4-Φ42	600	1020	780	560	690	300
2600	700	1600	1980	1760	2720	1980	2400	2720	440	520	4-Φ42				560	690	300
2800	760	1720	2120	1920	2850	2080	2500	2850	450	570	4-Φ42				650	750	
3000	810	1840	2250	2050	3200	2350	2800	3200	490	610	4-Φ42				650	750	

主要连接及外形尺寸 Main connection and external dimensions(mm)

通径 Diameter DN	0.25MPa压力(pressure) 法兰连接尺寸Flange connection dimension					
	D	D1	D2	f	b	z-Φd
400	540	495	463	4	28	16-Φ23
450	595	550	518	4	28	16-Φ23
500	645	600	568	4	30	20-Φ23
600	755	705	667	5	30	20-Φ26
700	860	810	772	5	32	24-Φ26
800	975	920	878	5	34	24-Φ31
900	1075	1020	978	5	36	24-Φ31
1000	1175	1120	1078	5	36	28-Φ31
1200	1375	1320	1280	5	30	32-Φ30
1400	1575	1520	1480	5	30	36-Φ30
1600	1790	1730	1690	5	32	40-Φ30
1800	1990	1930	1890	5	34	44-Φ30
2000	2190	2130	2090	5	34	48-Φ30
2200	2405	2340	2295	6	36	52-Φ33
2400	2605	2540	2495	6	38	56-Φ33
2600	2805	2740	2695	6	40	60-Φ33
2800	3030	2960	2910	6	42	64-Φ36
3000	3230	3160	3110	6	42	68-Φ36

通径 Diameter DN	0.6MPa压力(pressure) 法兰连接尺寸Flange connection dimension					
	D	D1	D2	f	b	z-Φd
400	540	495	463	4	28	16-Φ23
450	595	550	518	4	28	16-Φ23
500	645	600	568	4	30	20-Φ23
600	755	705	667	5	30	20-Φ26
700	860	810	772	5	32	24-Φ26
800	975	920	878	5	34	24-Φ31
900	1075	1020	978	5	36	24-Φ31
1000	1175	1120	1078	5	36	28-Φ31
1200	1405	1340	1295	5	40	32-Φ34
1400	1630	1560	1510	5	44	36-Φ37
1600	1830	1760	1710	5	48	40-Φ37
1800	2045	1970	1918	5	50	44-Φ40
2000	2265	2180	2125	5	54	48-Φ43
2200	2475	2390	2335	6	60	52-Φ43
2400	2685	2600	2545	6	62	56-Φ43
2600	2905	2810	2750	6	64	60-Φ49
2800	3115	3020	2960	6	68	64-Φ49
3000	3315	3220	3160	6	70	68-Φ49

通径 Diameter DN	1.0MPa压力(pressure) 法兰连接尺寸Flange connection dimension					
	D	D1	D2	f	b	z-Φd
400	565	515	480	4	32	16-Φ28
450	615	565	530	4	32	20-Φ28
500	670	620	582	4	34	20-Φ28
600	780	725	682	5	36	20-Φ31
700	895	840	794	5	40	24-Φ31
800	1015	950	901	5	44	24-Φ34
900	1115	1050	1001	5	46	28-Φ34
1000	1230	1160	1112	5	50	28-Φ37
1200	1455	1380	1328	5	56	32-Φ40
1400	1675	1590	1530	5	62	36-Φ43
1600	1915	1820	1750	5	68	40-Φ49
1800	2115	2020	1950	5	70	44-Φ49
2000	2325	2230	2150	5	74	48-Φ49

上海明珠阀门制造有限公司 WWW.CNVALVE.COM

短系列卧式法兰蝶阀
SHORT SERIES VERTICAL TYPE FLANGE BUTTERFLY VALVE

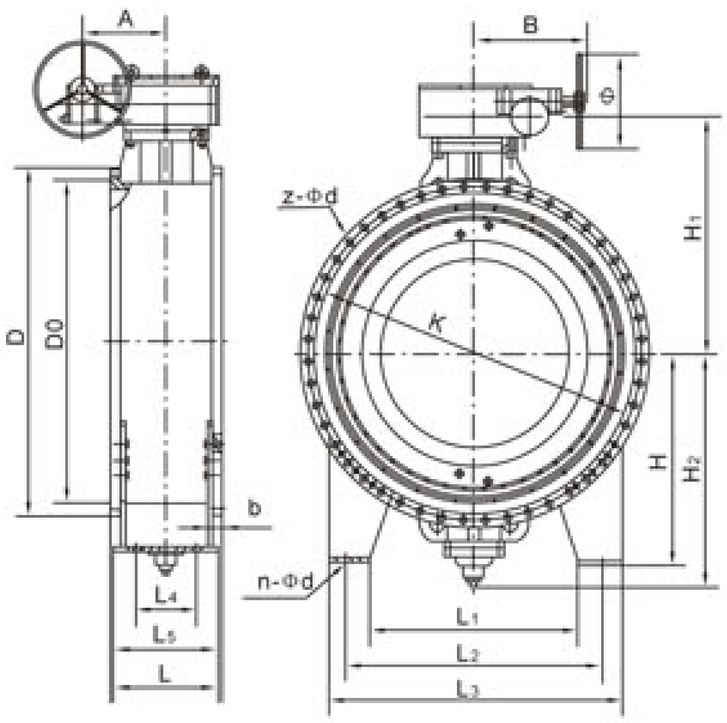

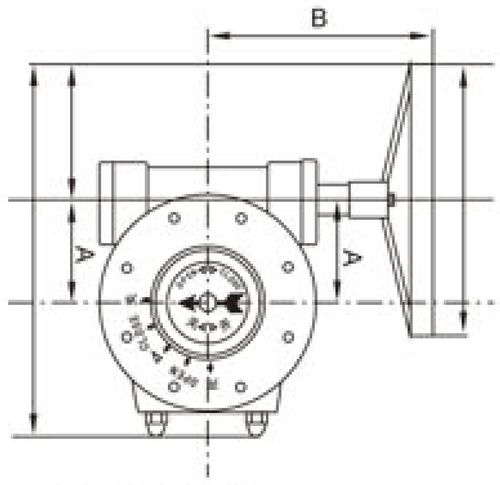

DN400~DN700
传动装置尺寸
Gearing dimension

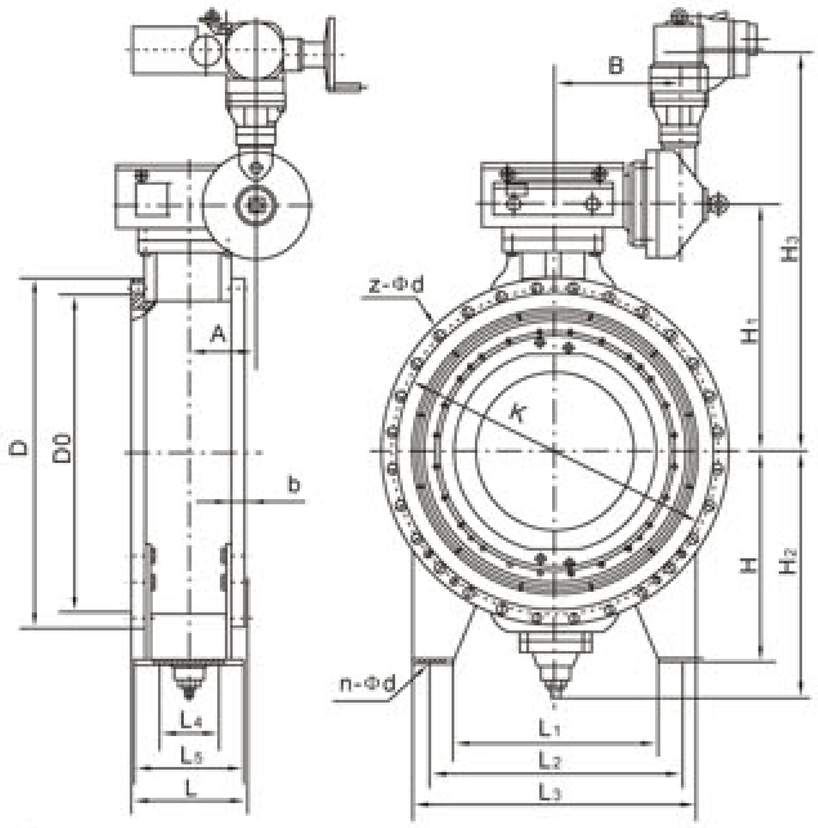

主要连接及外形尺寸 Main connection and external dimensions(mm)

通径 Diameter DN	蝶阀外形及底脚连接尺寸 External and bottom brace connecting dimension of butterfly											DdL341X			DdL941X		
	L	H	H1	H2	H3	L1	L2	L3	L4	L5	n-Φd	D0	A	B	A	B	开启时间 Open time
400	140	340	282	366			410				2-Φ22	350	128	234			
450	152	370	307	391			450				2-Φ22	350	128	234			
500	152	400	335	416			490				2-Φ22	400	223	273			
600	178	460	390	466			565				2-Φ26	400	223	273	155	403	63
700	229	540	447	520	1183	520	640	760		210	2-Φ26	400	223	373	207	438	71
800	241	580	507	590	1372	580	740	900		220	2-Φ30	二级传动	435	360	207	438	71
900	241	635	793	665	1430	666	820	950		220	2-Φ30	500	580	380	207	438	71
1000	300	690	843	718	1562	728	900	1040	130	280	4-Φ30	500	580	380	246	416	123
1200	360	810	1015	855	1630	868	1070	1240	160	300	4-Φ30	600	580	380	246	416	123
1400	390	920	1152	1000	1734	1000	1230	1430	180	320	4-Φ36	600	690	430	328	503	129
1600	440	1040	1282	1150	1979	1130	1400	1620	220	340	4-Φ36	600	690	430	360	537	129
1800	490	1140	1466	1240	1994	1250	1550	1800	260	390	4-Φ39	600	820	550	432	602	129
2000	540	1250	1586	1380	1980	1380	1700	1980	290	400	4-Φ42	600	820	550	432	602	300
2200	590	1360	1740	1520	2190	1550	1870	2190	330	425	4-Φ42	600	1020	780	560	690	300
2400	650	1480	1840	1650	2390	1610	2030	2390	385	485	4-Φ42	600	1020	780	560	690	300
2600	700	1600	1980	1760	2720	1980	2400	2720	440	520	4-Φ42				560	690	300
2800	760	1720	2120	1920	2850	2080	2500	2850	450	570	4-Φ42				650	750	
3000	810	1840	2250	2050	3200	2350	2800	3200	490	610	4-Φ42				650	750	

www.pv3000.com

主要连接及外形尺寸 Main connection and external dimensions(mm)

通径 Diameter DN	0.25MPa压力(pressure)法兰连接尺寸 Flange connection dimension					
	D	D1	D2	f	b	z-Φd
400	540	495	463	4	28	16-Φ23
450	595	550	518	4	28	16-Φ23
500	645	600	568	4	30	20-Φ23
600	755	705	667	5	30	20-Φ26
700	860	810	772	5	32	24-Φ26
800	975	920	878	5	34	24-Φ31
900	1075	1020	978	5	36	24-Φ31
1000	1175	1120	1078	5	36	28-Φ31
1200	1375	1320	1280	5	30	32-Φ30
1400	1575	1520	1480	5	30	36-Φ30
1600	1790	1730	1690	5	32	40-Φ30
1800	1990	1930	1890	5	34	44-Φ30
2000	2190	2130	2090	5	34	48-Φ30
2200	2405	2340	2295	6	36	52-Φ33
2400	2605	2540	2495	6	38	56-Φ33
2600	2805	2740	2695	6	40	60-Φ33
2800	3030	2960	2910	6	42	64-Φ36
3000	3230	3160	3110	6	42	68-Φ36

通径 Diameter DN	0.6MPa压力(pressure) 法兰连接尺寸Flange connection dimension					
	D	D1	D2	f	b	z-Φd
400	540	495	463	4	28	16-Φ23
450	595	550	518	4	28	16-Φ23
500	645	600	568	4	30	20-Φ23
600	755	705	667	5	30	20-Φ26
700	860	810	772	5	32	24-Φ26
800	975	920	878	5	34	24-Φ31
900	1075	1020	978	5	36	24-Φ31
1000	1175	1120	1078	5	36	28-Φ31
1200	1405	1340	1295	5	40	32-Φ34
1400	1630	1560	1510	5	44	36-Φ37
1600	1830	1760	1710	5	48	40-Φ37
1800	2045	1970	1918	5	50	44-Φ40
2000	2265	2180	2125	5	54	48-Φ43
2200	2475	2390	2335	6	60	52-Φ43
2400	2685	2600	2545	6	62	56-Φ43
2600	2905	2810	2750	6	64	60-Φ49
2800	3115	3020	2960	6	68	64-Φ49
3000	3315	3220	3160	6	70	68-Φ49

通径 Diameter DN	1.0MPa压力(pressure) 法兰连接尺寸 Flange connection dimension					
	D	D1	D2	f	b	z-Φd
400	565	515	480	4	32	16-Φ28
450	615	565	530	4	32	20-Φ28
500	670	620	582	4	34	20-Φ28
600	780	725	682	5	36	20-Φ31
700	895	840	794	5	40	24-Φ31
800	1015	950	901	5	44	24-Φ34
900	1115	1050	1001	5	46	28-Φ34
1000	1230	1160	1112	5	50	28-Φ37
1200	1455	1380	1328	5	56	32-Φ40
1400	1675	1590	1530	5	62	36-Φ43
1600	1915	1820	1750	5	68	40-Φ49
1800	2115	2020	1950	5	70	44-Φ49
2000	2325	2230	2150	5	74	48-Φ49

D94y6BW-1C 电动圆形百叶式调节蝶阀

ROUND LOUVRE TYPE ELECTRIC ADJUSTIVE BUTTERFLY VALVE

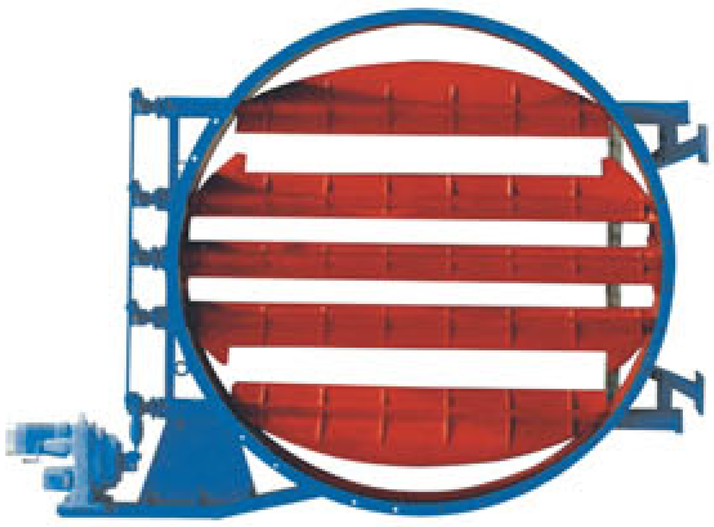

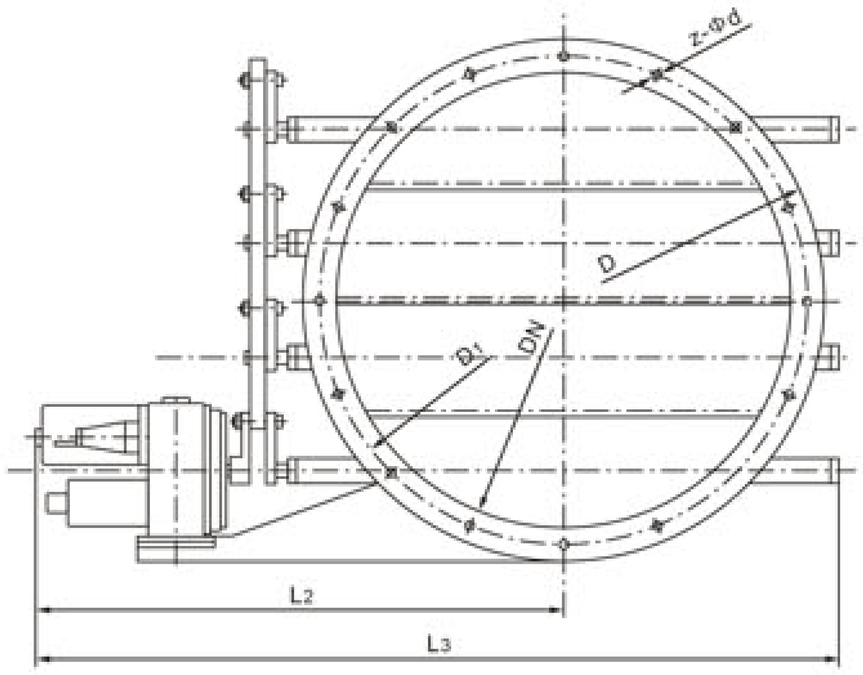

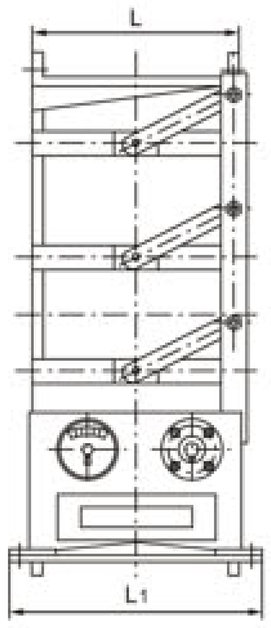

主要性能规范：Main property and specification

公称压力 Nominal Diameter PN(MPa)	强度测试 Strength test(MPa)	工作温度 Working temperature(℃)	泄漏量度 Leakage degree	信号电流 Signal currency (mA)	适用介质 Suitable medium
0.1	0.15	-28~350	≤3%	0~10或(or)4~20	粉尘、气体 Dust、gas

主要尺寸及参数 Main dimensions and parameter

D94Y6BW-0.5									电动执行器 electric-actuator		配套风机型号 Matching blower model
通径 Diameter DN	Dimension 尺 寸 (mm)								型号Model	输出功率 Output power	
	D_1	D	L	L_1	L_2	L_3	Z-Φd				
280	306	324	160	300	567	754	8-Φ10		DKJ-310	25	4-72
320	350	367	180		618	827	16-Φ7				
360	394	416			643	876	16-Φ7				
450	490	512		365	801	1082	16-Φ10		DKJ-410	60	4-72
500	550	572			831	1142					
600	650	676	200		883	1246	16-Φ10				
180	205	230	160	245	520	670	8-Φ7		DKJ-210	10	9-19
200	225	250			535	685					9-26
224	254	284			540	702	8-Φ10				9-19
250	281	310			558	728					9-26
280	320	360			572	753	8-Φ12		DKJ-310	25	9-19
315	355	395	180		605	830					
355	395	435		300	630	870	12-Φ12				
400	450	500			715	990					9-26
450	500	550			735	1035					
500	560	620			770	1105					
560	620	680	200		820	1185	16-Φ12				
630	690	750			835	1235	16-Φ12		DKJ-410	60	9-26
710	770	830			875	1315	16-Φ15				
800	860	920	220	365	930	1415					
900	970	1040			990	1535			DKJ-510	160	4-72 Y5-48
1000	1065	1110	260	424	1240	1820	24-Φ15				
1100	1170	1220			1295	1930	20-Φ15				
1120	1190	1250	280	560	1310	1960	24-Φ15		DKJ-610	250	Y5-48 G4-73 Y-11
1200	1270	1330			1350	2040					
1400	1470	1520	320		1635	2420	28-Φ15				
1600	1660	1700			1738	2603					
1800	1860	1900	420		1825	2800	32-Φ15				
2000	2070	2140			1845	2940					
2200	2260	2300	450		2028	3200	36-Φ19				
2500	2560	2600			2175	3500					
2800	2860	2900	500		2375	3800					

一手控制阀网 www.cv3000.com

电动矩形百叶式调节蝶阀
RECTANGLE LOUVRE TYPE ELECTRIC ADJUSTIVE BUTTERFLY VALVE

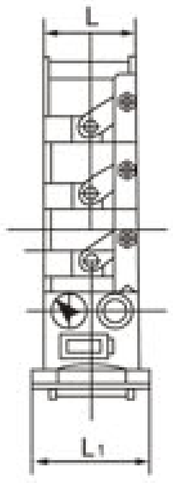

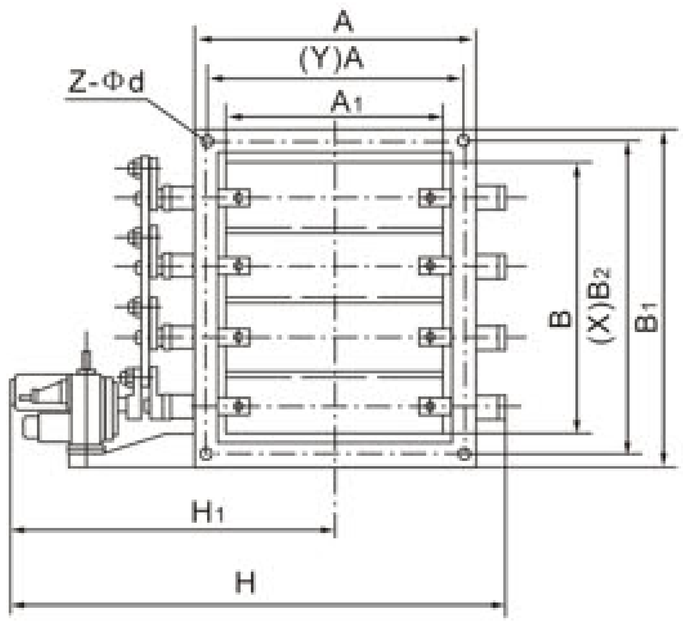

用途 Application

电动百叶蝶阀配置电动执行机构广泛应用于建材、冶金、矿山、电力等生产过程，自动控制或手动控制调节管路中介质流量。

The electric louver type butterfly valves assort with the electric actuator are widely used in the pipeline applied in production of building, metallurgy, mine, electric power etc. for automatically or manually controlling and adjusting medium flux in the pipeline.

特点 Characteristic

蝶板采用百叶多轴体结构，流体均匀、启闭力矩小、动作灵敏、性能可靠。

The disc adopts louver multi spindle body of structure. Have characteristic of fluid uniformity, small on and off moment, handy operation and credible capability.

主要技术参数 Main technical parameter

公称压力(MPa) Nominal pressure	强度测试(MPa) Strength test	泄漏量 Spillage	使用温度℃ Suitable temperature	使用介质 Suitable medium	输入信号(直流) Input signal(DC)	介质流速 Flow rate of medium
0.1	0.15	≤3%	-28~≤350℃	空气、含尘气体 Air、dust contained gas	Ⅱ(type)型0~10MA Ⅲ(type)型4~20MA	≤25m/s

三千控制阀网 www.cv3000.com

主要零件材料：Materials for main parts

名称 Name	阀体 Body	百叶板 Louver disc	连杆 Pitman	支架 Bracket	曲柄 Brace	阀轴 Shaft
材料 Material	碳钢 Carbon steel	碳钢 Carbon steel	碳钢 Carbon steel	碳钢 Carbon steel	碳钢 Carbon steel	2Cr13

主要连接尺寸及重量 Main connection dimensions and weight

A×B	A1×B1	A2×B2	L	L1	H1	H	B	Z-Φd	X	Y	轴线 Axes	执行器 Actuator	重量 weight (kg)
320×180	375×106	400×240	180	245	580	735	8	16-Φ14	5	3	2	DKJ-210	184
320×250	375×295	400×330	180	245	625	825	8	16-Φ14	5	3	2	DKJ-210	198
400×200	455×255	500×330	200	245	610	805	8	16-Φ18	5	3	2	DKJ-210	215
400×320	455×375	500×420	200	245	870	915	8	16-Φ18	5	3	2	DKJ-210	263
500×200	555×255	600×300	220	245	610	805	8	16-Φ18	5	3	3	DKJ-210	272
500×400	555×455	600×500	220	245	670	915	8	20-Φ18	5	5	3	DKJ-210	292
630×320	685×375	730×420	220	245	640	805	10	20-Φ18	7	3	3	DKJ-210	322
630×400	685×455	730×500	220	245	710	995	10	24-Φ18	7	5	3	DKJ-210	354
800×400	855×455	900×500	240	300	670	945	10	24-Φ18	7	5	4	DKJ-310	443
800×630	855×685	900×730	240	300	710	995	10	28-Φ18	7	7	4	DKJ-310	590
1000×500	1070×570	1130×830	260	300	790	1075	10	24-Φ23	7	5	4	DKJ-310	640
1000×800	1070×870	1130×930	260	300	905	1270	10	28-Φ23	7	7	4	DKJ-310	770
1250×630	1320×700	1380×760	280	300	1005	1505	10	32-Φ23	9	7	5	DKJ-310	790
1250×1000	1320×1070	1380×1130	280	300	1105	1705	10	32-Φ23	9	7	5	DKJ-310	920
1400×800	1470×870	1530×930	300	385	1075	1575	10	36-Φ23	11	7	5	DKJ-410	940
1400×1250	1470×1320	1530×1380	300	385	1300	2025	10	40-Φ23	11	9	5	DKJ-410	1240
1600×1000	1670×1070	1730×1130	320	385	1175	1775	10	36-Φ23	11	7	5	DKJ-410	1540
1600×1250	1670×1320	1730×1380	320	385	1300	2025	10	40-Φ23	11	9	5	DKJ-410	1680
1800×1250	1870×1320	1930×1380	340	420	1450	2175	10	44-Φ23	13	9	6	DKJ-510	1846
1800×1400	1870×1470	1930×1530	340	420	1525	2325	10	48-Φ23	13	11	6	DKJ-510	1953
2000×1250	2070×1320	2130×1380	360	420	1450	2175	12	48-Φ23	14	9	6	DKJ-510	2170
2000×1800	2070×1670	2130×1730	360	420	1620	2520	12	52-Φ23	14	11	6	DKJ-510	2392
2500×1800	2570×1870	2630×1730	420	450	1695	2595	12	56-Φ23	17	11	8	DKJ-610A	2740
2500×2000	2570×2070	2630×2130	420	450	1895	2995	12	64-Φ23	17	15	8	DKJ-610A	2801

D341W-0.5C/1.0C 蜗轮传动 worm gear driving
D941W-0.5C/1.0C 电动 electric driving

风量空气调节蝶阀
AIR OUTPUT ADJUSTIVE BUTTERFLY VALVE

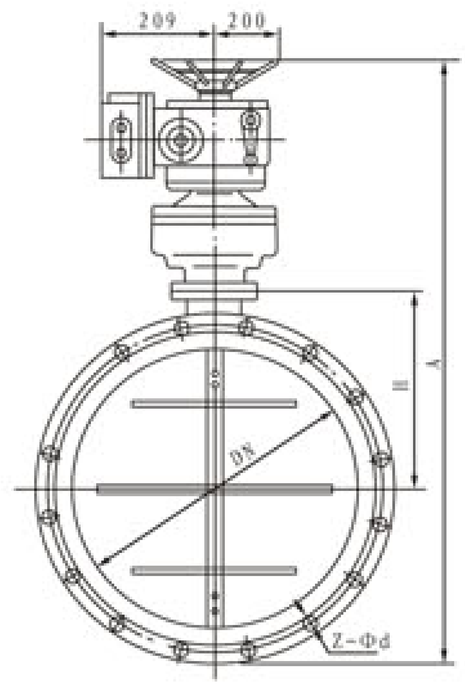

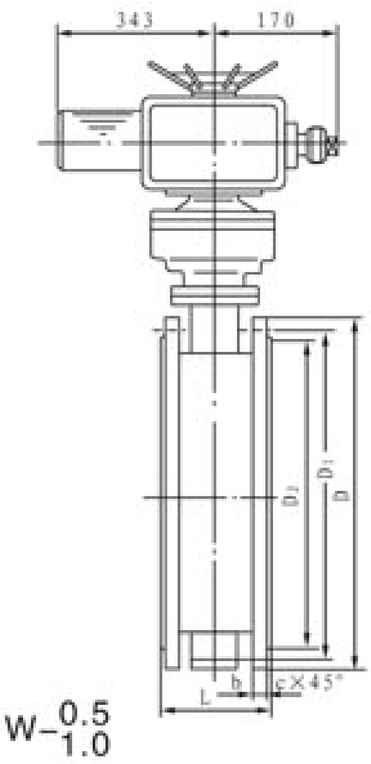

D941W-0.5/1.0

该阀可作为通风除尘管路双向启闭及调节设备，适用于冶金、矿山、水泥、化工、发电等行业的通风除尘及环境保护系统中。
This valve can be used as adjusting and double direction open & close device in ventilation and dedusting pipeline. It is suitable for application in ventilation & dedusting and environmental protection systems in metallurgy, mine, chemical, electric power industries and etc.

主要性能规范：Main property and specification

公称压力 Nominal pressure PN(MPa)	试验压力Test pressure Ps(MPa)		工作温度 Working temperature (℃)	适用介质 Suitable medium
	强度测试 Strength Test (MPa)	泄漏率 Leakage rate		
0.05	0.075	≤390	-28~350	含尘烟气、空气、煤气 Dusty air、air, coal gas
0.10	0.15			

主要零件材料：Materials for main parts

零件名称 Part name	阀体蝶板 Body, Disc	转轴 Spindle	填料 Packing	手柄 Hand wheel	阀体蝶板 Body, Disc	长,短支承套 Long, short supporting sleeve	长,短半轴,锥销 Long, short half shaft, wimble pin	D341H 密封面 Sealing face
材料 Material	Q235A 20G	45 40Cr	YS 250F	KT 33-8	碳素钢 Carbonic steel	球墨铸铁 Nodular cast iron	不锈钢 Stainless steel	橡胶 Rubber

三千阀制阀网

D941W-0.5C/1.0C 主要尺寸及重量 Main dimensions and weight

www.cv3000.com

公称通径 Nominal Diameter DN(mm)	Dimension尺寸 (mm)									重量 weight (kg)
	D	D_1	D_2	A	H	L	b	C	Z-Φd	
350	490	445	415	1029	286	180	22	4	12-Φ22	162
400	540	495	465	1079	311	180	22	4	16-Φ22	168
450	595	550	520	1131	336	180	24	4	16-Φ22	177
500	645	600	570	1181	361	180	24	4	20-Φ22	190
600	755	705	670	1289	411	180	24	5	20-Φ26	213
700	860	810	775	1346	466	270	28	5	24-Φ26	276
800	975	920	880	1453	516	270	28	5	24-Φ30	304
900	1075	1020	980	1526	566	270	28	5	24-Φ30	327
1000	1175	1120	1060	1626	616	270	28	5	28-Φ30	349
1200	1375	1320	1280	1853	716	270	28	5	32-Φ30	394
1300	1475	1420	1380	2000	770	320	32	5	32-Φ30	564
1400	1575	1520	1480	2100	820	320	32	5	36-Φ30	644
1500	1690	1630	1590	2208	866	320	32	5	36-Φ30	695
1600	1790	1730	1690	2305	920	320	32	5	40-Φ30	744
1800	1990	1930	1890	2505	1020	320	34	5	44-Φ30	875
2000	2190	2130	2090	2705	1120	320	34	5	48-Φ30	984
2200	2405	2340	2295	2913	1220	320	34	6	52-Φ33	1275
2400	2605	2540	2495	3190	1355	320	38	6	56-Φ33	1640
2600	2805	2740	2695	3390	1455	320	38	6	60-Φ33	1890
2800	3030	2960	2910	3590	1555	320	38	6	64-Φ36	2140
3000	3230	3160	3110	3790	1654	320	38	6	68-Φ36	2440

主要尺寸及重量 Main dimensions and weight

公称通径 Nominal Diameter DN(mm)	Dimension 尺 寸 (mm)													重量 weight (kg)
	D	D_1	D_2	D_3	f	b	L	L_1	L_2	L_3	L_4	H	Z-Φd	
200	320	280	258	148	2	10	160	291	182	603	63	183	8-Φ17.5	123
250	375	335	312	148	2	12	160	316	207	653	63	183	12-Φ17.5	140
300	440	395	365	148	2	12	180	341	232	703	63	183	12-Φ22	161
350	490	445	415	148	2	12	180	366	257	753	63	183	12-Φ22	192
400	540	495	465	190	2	14	200	417	310	860	90	253	16-Φ22	230
450	595	550	520	190	2	14	200	442	335	910	90	253	16-Φ22	270
500	645	600	570	190	2	14	220	460	360	960	90	253	20-Φ22	340
600	755	705	670	190	2	14	220	517	410	1060	90	253	20-Φ26	405
700	860	810	775	246	3	16	240	760	540	1517	120	180	24-Φ26	540
800	975	920	880	246	3	16	240	813	590	1567	120	280	24-Φ30	680
900	1075	1020	980	246	3	16	260	863	640	1617	120	280	24-Φ30	857
1000	1175	1120	1060	246	3	16	260	913	690	1667	120	280	28-Φ30	1040
1100	1275	1220	1180	306	3	18	280	1006	740	1190	145	320	28-Φ30	1223
1200	1375	1320	1280	306	3	18	280	1056	790	2040	145	320	32-Φ30	1442
1300	1475	1420	1380	306	3	18	300	1106	840	2090	145	320	32-Φ30	1592
1400	1575	1520	1480	306	3	18	300	1156	890	2140	145	320	36-Φ30	1762
1500	1690	1630	1590	460	3	20	320	1248	940	2415	225	500	36-Φ30	2016
1600	1790	1730	1690	460	3	20	320	1175	1010	2308	225	500	40-Φ30	2263
1700	1890	1830	1790	460	3	20	340	1348	1040	2515	225	500	40-Φ30	2504
1800	1990	1930	1890	460	4	22	340	1398	1090	2565	225	500	44-Φ30	2753
1900	2090	2030	1990	540	4	22	360	1447	1145	2685	267	554	48-Φ30	3045
2000	2190	2130	2090	540	4	22	360	1527	1195	2785	267	554	48-Φ30	3333
2100	2295	2235	2190	540	4	22	380	1577	1245	2886	267	554	48-Φ30	3602
2200	2405	2340	2295	540	4	22	380	1627	1295	2985	267	554	52-Φ33	3907
2300	2505	2440	2395	540	4	24	400	1677	1345	3085	267	554	52-Φ33	4247
2400	2605	2540	2495	540	4	24	400	1727	1395	3185	267	554	56-Φ33	4598
2500	2705	2640	2595	540	4	24	420	1777	1445	3285	267	554	60-Φ33	4938
2600	2805	2740	2695	540	4	24	420	1827	1495	3385	267	554	60-Φ33	5324
2700	2915	2850	2795	710	4	26	440	1877	1545	3485	352	645	60-Φ30	5694
2800	3030	2960	2910	710	4	26	440	1927	1595	3585	352	645	64-Φ36	6089
2900	3130	3060	3010	710	4	26	440	2150	1700	3890	352	645	64-Φ36	6528
3000	3230	3160	3110	710	4	26	460	2200	1750	3990	352	645	68-Φ36	7025
3100	3330	3260	3210	710	4	28	480	2250	1800	4090	352	645	68-Φ36	7475
3200	3430	3360	3310	710	4	28	480	2300	1850	4190	352	645	72-Φ36	7904
3300	3530	3460	3410	910	4	28	500	2345	1910	4350	440	825	72-Φ36	8356
3400	3630	3560	3510	910	4	28	500	2395	1960	4450	440	825	76-Φ36	8720
3400	3740	3670	3620	910	4	30	520	2445	2010	4550	440	825	76-Φ36	9126
3600	3840	3770	3720	910	4	30	520	2495	2060	4650	440	825	80-Φ36	9604
3700	3940	3870	3820	910	4	30	540	2565	2130	4750	440	825	80-Φ36	10016
3800	4050	3970	3920	910	4	30	540	2615	2180	4650	440	825	80-Φ39	10838
3900	4145	4070	4020	910	4	32	560	2665	2230	4950	440	825	80-Φ39	11385
4000	4245	4170	4120	910	4	32	560	2715	2280	5050	440	825	84-Φ39	11822

三千控制网 www.cv3000.com

D4J1W-1C

手动矩形蝶阀
HANDLE OPERATED RECTANGLE BUTTERFLY VALVE

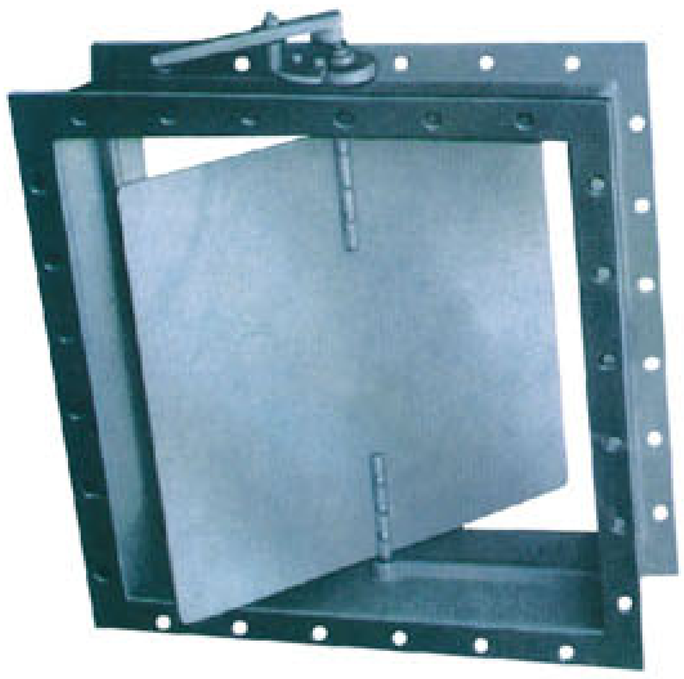

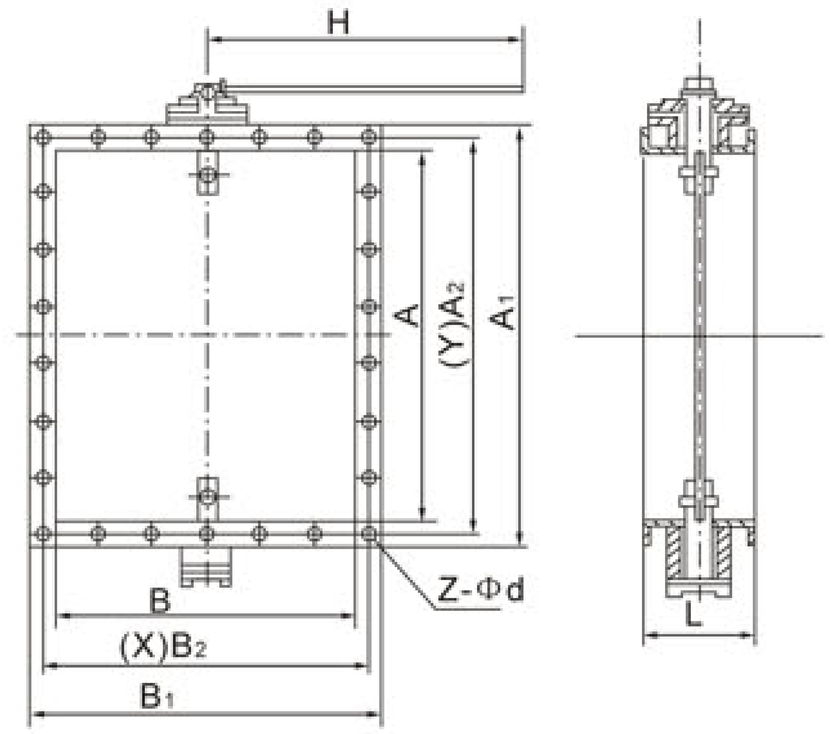

用途 Application

手动矩形蝶阀广泛应用于建材、冶金、矿山、电力等行业，用于调节管路中的介质流量。

The handle operated rectangle butterfly valves are widely used in industries of construction, metallurgy, mine, electric power and etc. for flux adjustment in pipeline.

主要技术参数 Main technical parameter

公称压力(MPa) Nominal pressure	强度测试(MPa) Strength test	泄漏量 Spillage	使用温度℃ Suitable temperature	使用介质 Suitable Medium	输入信号(直流) Input signal(DC)
0.1	0.15	≤3%	-28~350	粉尘、含尘气体 Dust、dust contained gas	Ⅱ(type)型0~10MA Ⅲ(type)型4~20MA

三千控制阀网 www.cv3000.com

主要零件材料：Materials for main parts

名称 Name	阀体 Body	蝶板 Disc	压盖 Shell	手柄 Handle	阀轴 Shaft	轴套 Sleeve	泄漏量 Spillage
材料 Material	碳钢 Carbon steel	碳钢 Carbon steel	碳钢 Carbon steel	碳钢 Carbon steel	1Cr13	铜合金 Copper alloy	≤3%

DJ41W-0.1主要连接尺寸及重量 Main Connection Dimensions and Weight

A×B	A1×B1	A2×B2	L	B	H	Y	X	Z-Φd	重量 Weight (kg)
120×120	180×180	155×155	120	6	350	2	2	8-Φ10	14
160×120	220×180	195×155	120	6	350	2	2	8-Φ10	16
160×160	220×220	195×195	120	6	350	2	2	8-Φ10	18
200×160	260×220	235×195	120	8	350	3	2	10-Φ10	22
200×200	260×260	235×235	120	8	350	4	2	12-Φ10	28
250×120	320×190	290×160	140	8	450	4	3	14-Φ10	30
250×160	320×230	290×200	140	8	450	4	3	14-Φ10	38
250×200	320×270	290×240	140	8	450	4	4	16-Φ10	47
250×250	320×320	290×290	140	8	450	4	4	16-Φ10	56
320×160	390×230	360×200	140	8	450	5	3	16-Φ10	50
320×200	390×270	360×240	140	8	450	4	4	18-Φ10	58
320×250	390×320	360×290	140	8	450	4	4	18-Φ10	66
320×320	390×390	360×360	140	8	450	5	5	20-Φ10	75
400×200	470×270	440×240	140	8	450	6	4	20-Φ12	63
400×250	470×320	440×290	140	8	450	6	4	20-Φ12	71
400×320	470×380	440×360	140	8	450	6	5	22-Φ12	80
400×400	470×470	440×440	140	8	450	6	6	24-Φ12	90
500×200	570×270	540×240	140	8	450	7	4	22-Φ12	68
500×250	570×320	540×290	140	8	450	7	4	22-Φ12	78
500×320	570×390	540×360	140	8	450	7	5	24-Φ12	88
500×400	570×470	540×440	140	8	450	7	6	26-Φ12	108
500×500	570×570	540×540	140	8	450	7	7	28-Φ12	114
630×250	710×320	680×300	160	10	600	8	4	24-Φ12	79
630×320	710×400	680×370	160	10	600	8	5	26-Φ12	89
630×400	710×480	680×450	160	10	600	8	6	28-Φ12	104
630×500	710×580	680×550	160	10	600	8	7	30-Φ12	126
630×630	710×710	680×680	160	10	600	8	8	32-Φ12	148
800×320	880×440	850×370	160	10	600	10	5	30-Φ14	132
800×400	880×480	850×450	160	10	600	10	5	32-Φ14	146
800×500	880×580	850×550	160	10	600	10	7	34-Φ14	160
800×630	880×710	850×680	160	10	600	10	7	36-Φ14	180
800×800	880×880	850×850	160	10	600	10	10	34-Φ14	210

注：需大口径1000×800~4000×3600的矩形蝶阀，须加装蜗轮传动装置，订货时应注明。

Note: The rectangle butterfly valve with big caliber (DN 1000*800~4000*3600) must equip with worm gear to operate. This should be indicated when ordering.

蓄能罐式液控缓闭止回蝶阀

HYDRAULIC SLOW CLOSING CHECK BUTTERFLY VALVE WITH ACCUMULATOR

DX7pk41H

DX7pk41X–6、10、16

DX7K141H

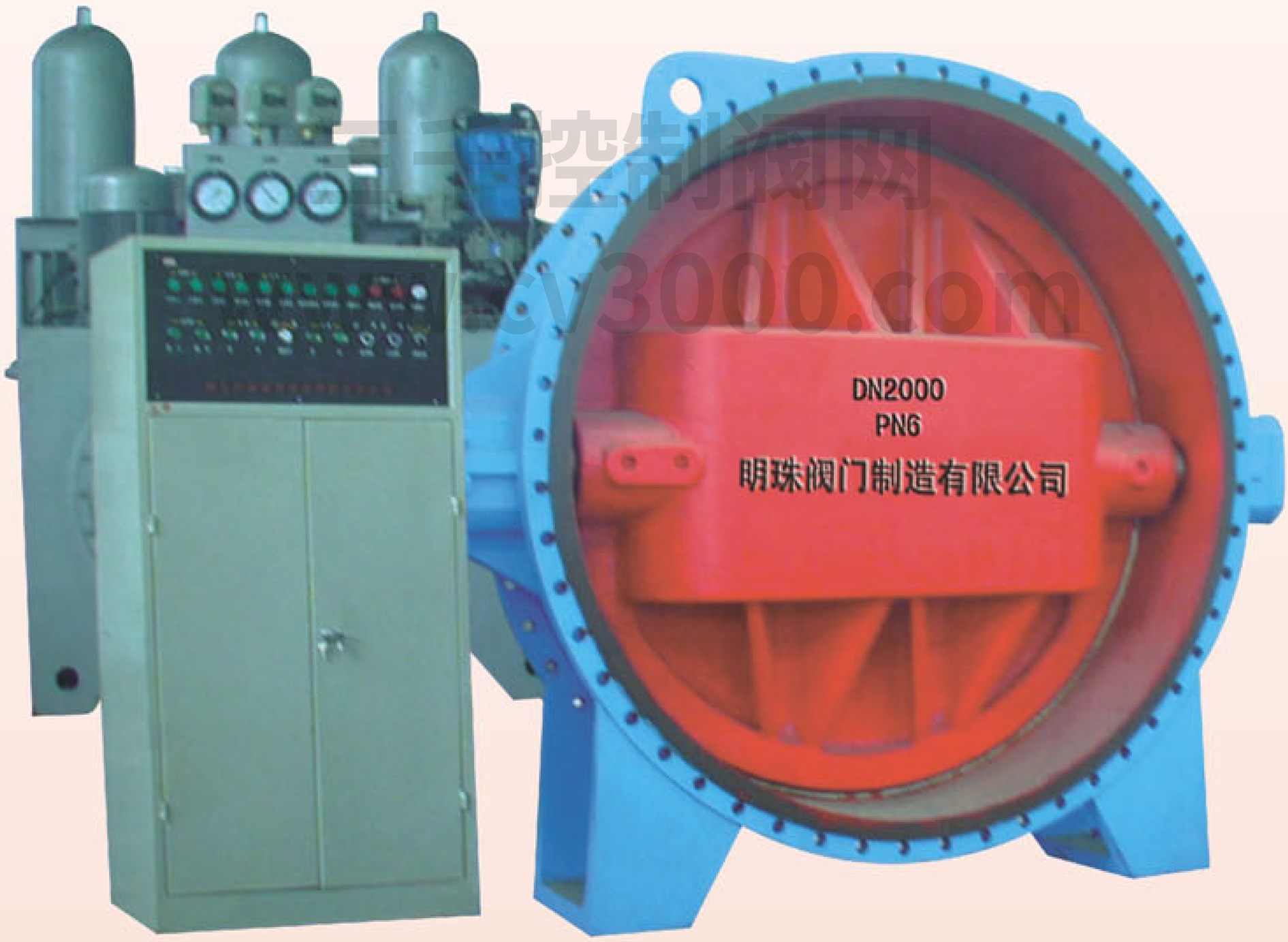

三三控制阀网
www.sfcv3000.com

蓄能罐式液控缓闭止回蝶阀
HYDRAULIC SLOW CLOSING CHECK BUTTERFLY VALVE WITH ACCUMULATOR

一、用途

蓄能罐式液控缓闭止回蝶阀是我厂在消化吸收国外液控阀门最新基础上研制而成的新型产品。目前，该阀是我国最新一代液控蝶阀，它兼有闸阀和止回阀的功能，是一种能按预先调定好的程序，分两阶段(先快关一定角度，再慢速闭剩余角度)关闭的动作来消除水锤对管网破坏的理想控制设备。

二、结构特点

本产品主要由蝶阀本体、传动装置、液压和电气控制部分等组成。具有以下主要特点：

本系列产品分环保型、常规型产品：

A.环保型产品在阀腔内过水面采用对人身体健康安全无害环保型涂料，符合生活饮用水卫生标准，对管道中的介质不产生任何污染。

B.常规型产品在阀腔内过水面采用附着力强的防腐防锈涂料。本阀密封形式分为两种，第一种形式为：不锈钢-不锈钢，并采用三偏心结构，其密封性能可靠，蝶板关到位时，易于脱开，密封圈均采用不锈钢，耐蚀耐磨使用寿命长，维修方便；第二种形式为：橡胶软密封，阀门用软密封橡胶，不仅保证性能也易更换密封圈；轴承为无铅型无给油自润滑轴承具有承载能力强，耐磨性好，摩擦阻力小等特点；轴端密封采用自紧式等双重密封，密封效果好；蝶板造形采用流线型设计，具有流阻系数小(<0.2)，阀门强度、钢性好，阀体强度试验可承受两倍公称压力。外形具有新颖、美观等特点。

本阀具有较完善的液压系统和电气控制系统，既可就地操作，也可远距离操作，可本阀的控制系统采用蓄能罐取代了目前国内几家阀门厂生产的重锤式液控蝶阀中的重锤，将重锤势能变为油压势能，不仅节省了长期运行支承重锤所耗的能量，改善了液压系统的保压性能，避免了运行时维护人员的人身伤亡事故和精神上的不安全感和恐惧感，其控制机构构思新颖，设计合理，体积小，重量轻，结构简单，功能齐全，动作灵活可靠，外形美观，节能节材，维修方便，且维修时不需停止水泵工作等。以简便地实现泵阀联锁程序控制及微机集中控制，停电时，摇动手动油泵即可关阀。阀门开闭，动作十分方便。

本阀液压和电气控制部分与阀体分体就近安装，根据液压和电气部分是否分体又分两种形式，用户可根据情况选择。

三、部分原理

液压系统动力源有三种即油泵电机组，蓄能器存储的液压能，手动油泵，其中蓄能器存储的液压能为主动力源，油泵电机组负责向蓄能器充液，需要时也可直接驱动阀门开关，手动油泵用于蓄能器无存储能量且无电情况下，手动开关阀门。

对失电关阀型液压系统，两电磁球阀电磁铁同时得电时阀门开启，同时失电时阀门关闭。对得电关阀型液压系统，一电磁球阀电磁铁得电阀门开启，另一电磁球阀电磁铁得电阀门关闭。

阀门开启速度由集成块上节流阀调节；阀门关闭分两阶段自动进行，先快关约65℃，再慢关剩下约25℃，快慢关闭速度和角度均在油缸后端装置上调节。

在无电或需要手动的情况下，用人工推动电磁球阀阀芯，使油路处于相应状态，摇动手动油泵，即可实现阀门的开启或关闭。

Ⅰ.Application

The hydraulic slow closing check butterfly valve with accumulator is the new product of our company developed on the basis of the latest technology from abroad after technical absorption and digestion. At present, this valve is the most modern of its kind in our country, which has both functions of gate valve and check valve. Two phases, the quick and slow closing action are divided according to pre-programmed procedures. It is an ideal controlling equipment to eliminate the damage to pipeline caused by water hammer.

Ⅱ.Characteristic

The butterfly valve is mainly composed of body, gearing ,hydraulic station, electric control case and so on. It has following characteristics.

This series of product is divided into environmental protection and conventional type:

A. Environmental protection type: environmental protection coating which is harmless to personal health is adopted in the inside chamber, com plying with the hygienic standard for drinking water ,free from pollution to the medium in the pipe.

B. Conventional type: the anti corrosion and anti-rust coating with strong adhesive force is adopted in the inside chamber.

This valve can be divided into 2 types according to its sealing form. The first is stainless type, adopting trio-eccentric construction with reliable sealing performance. When the disc is closed in place it is easy to trip off. The seal ring adopts stainless steel which is anti-erosive and wearable with long service life and convenient to maintain. The second is rubber soft sealing type, adopting soft sealing rubber which make easy of sealing ring exchange as well as insure corresponding performance. The used bearings are leadless and self-lubricated with the advantages of strong bearing capacity, good wear resistance, and small frictional force. The shaft end seal adopts self-tightening double seal with good seal effect. The disc is of streamline design with small flow resistance coefficient (<0.2). The strength and rigidity of the valve are good and the body strength test can bear 2 times of nominal pressure. The appearance of valve is novel and beautiful.

This valve has perfect hydraulic pressure system and electrical control system which make possible both on-site and remote operation. Besides, accumulator in the control system of this valve replaces the heavy hammer in the hammer type hydraulic control butterfly valve currently manufactured by several valve producers at home, thus transform the hammer potential energy into oil pressure potential energy, not only save the energy consumed by supporting the heavy hammer in the long term operation, but also improve the pressure holding performance of hydraulic system. At the same time, maintenance staffs' personal safety, spiritual uneasiness and sense of fear have been prevented while the valve is working. Its control device has characteristics of novel idea, reasonable design, small volume, light in weight, simple structure, complete function, flexible and reliable operation, fine appearance, energy and material saving, convenient maintenance and maintaining without water pump stop working. The combination control action of pump and valve, central micro-computerized control can be simply realized. And when electricity is off the valve can be closed by hand operating the oil pump. Both open and close of valve is quite convenient. Install in a feasible instance the hydraulic pressure and electric actuated control part and the extended valve. Basing on whether the hydraulic pressure and the electrical systems are separated it can also be divided into 2 forms. Users can choose up to the situation.

Ⅲ.Working principle

The hydraulic system has three kinds of active power source. They are oil pump electric unit, accumulator and manual oil pump. The power supplied by accumulator serves as the main power source, the oil pump takes charge of liquid injection into the accumulator and it can also be used to opened/closed the valve directly when it is necessary. The oil pump is applied to opened/closed the valve when power failure occurs or in case of no preserved energy inside the accumulator.

For the hydraulic system of the type of valve closing in the state not connected electricity, the valve is being opened when the magnetic iron of two solenoid ball valves are connected with electricity simultaneously, on the contrary, the valve is being closed when the magnetic iron of solenoid ball valves are disconnected with electricity. For the hydraulic system of the type of valve opening in the state connected with electricity, the valve is beingopened when one magnetic iron inside the solenoid ball valve is con nectedwith electricity. The valve is being closed when another magnetic iron inside the solenoid ball valve is connected with electricity.

The opening speed of valve is regulated by throttle valve on the integrated circuit piece, the closing of valve is divided into two phases to be carried out automatically, quick close to some 65℃ and then close to the rest 25℃. The speed and angle of quick/slow of the valve are regulated through a device on the terminal of oil cylinder. Under the state without electricity the valve has to opened manually, please regulate the core of solenoid ball valve and keep oil line being in the corresponding state, rotate the oil pump unit to perform the opening/closing of the valve.

www.cv300.com

四、型号编制说明 Ⅳ.Model compiling specification

** D x 7 pk 4 1 H – * Q

- 阀体材料:球墨铸铁 Body material: ductile cast iron
- 公称压力:1/10Mpa Nominal pressure:1/10MPa
- 密封面材料:不锈钢 Seal surface materials: stainless steel
- 结构形式:垂直板式 Construcion type: vertical plate type
- 连接形式:法兰式 Connection mode: flanged
- 调节方式:PLC控制 Adjusting mode: PLC control
- 传动方式:液动 Driving mode: hydraulic
- 特征:蓄能罐式 Characteristics: accumulator type
- 类型:蝶阀 Valve type: butterfly valve
- 公称通径: **mm Nominal diameter: **mm

** D x 7 pk 4 1 X – *

- 公称压力:1/10Mpa Nominal pressure:1/10MPa
- 密封面材料:橡胶 Materials of sealing surface: rubber
- 结构形式:垂直板式 Construction type: vertical plate type
- 连接形式:法兰式 Connection type: flanged
- 调节方式:PLC控制 Adjusting mode: PLC control
- 传动方式:液动 Driving mode: hydraulic
- 特征:蓄能罐式 Characteristics: accumulator type
- 类型:蝶阀 Valve type: butterfly valve
- 公称通径:**mm Nominal diameter: **mm

** D x 7 k 4 1 H – * Q

- 调节方式:液控 Adjusting mode: hydraulic control
- 其他同上 The rest are the same with the above

三千控制阀网
www.cv3000.com

五、主要性能参数 Ⅴ.Main performance parameter

(1) 蝶阀基本参数 Basic parameters of butterfly valve

公称压力参数(MPa)	Nominal pressure parameters(MPa)	0.25	0.6	1.0	1.6
密封试验压力参数(MPa)	Seal test pressure parameters(MPa)	0.275	0.66	1.1	1.76
强度试验压力参数(MPa)	Strength test pressure parameters(MPa)	0.375	0.9	1.5	2.4
适用温度参数	Applicable temperature parameters	≤250℃			
适用介质	Applicable medium	水 water			

(2) 特殊参数 Special parameter

开阀时间(秒) Time for valve opening(s)		阀门通径 Valve diameter		可调 adjustable
		<1000	≥1000	
		10~60	30~120	
关阀时间(秒) Time for valve closing (s)	快关 Quick closing	2~25	3~30	
	慢关 Slow closing	4~60	5~60	
关阀角度(度) Angle of valve closing (degree)	快关 Quick closing	65±10		
	慢关 Slow closing	25±10		

六、外形及安装连接尺寸

VI.Following diagrams for external and connection dimension.

本示图为液控阀A型且液电分离

This diagram is A type hydraulic control valve with separated electric control case and hydraulic control case

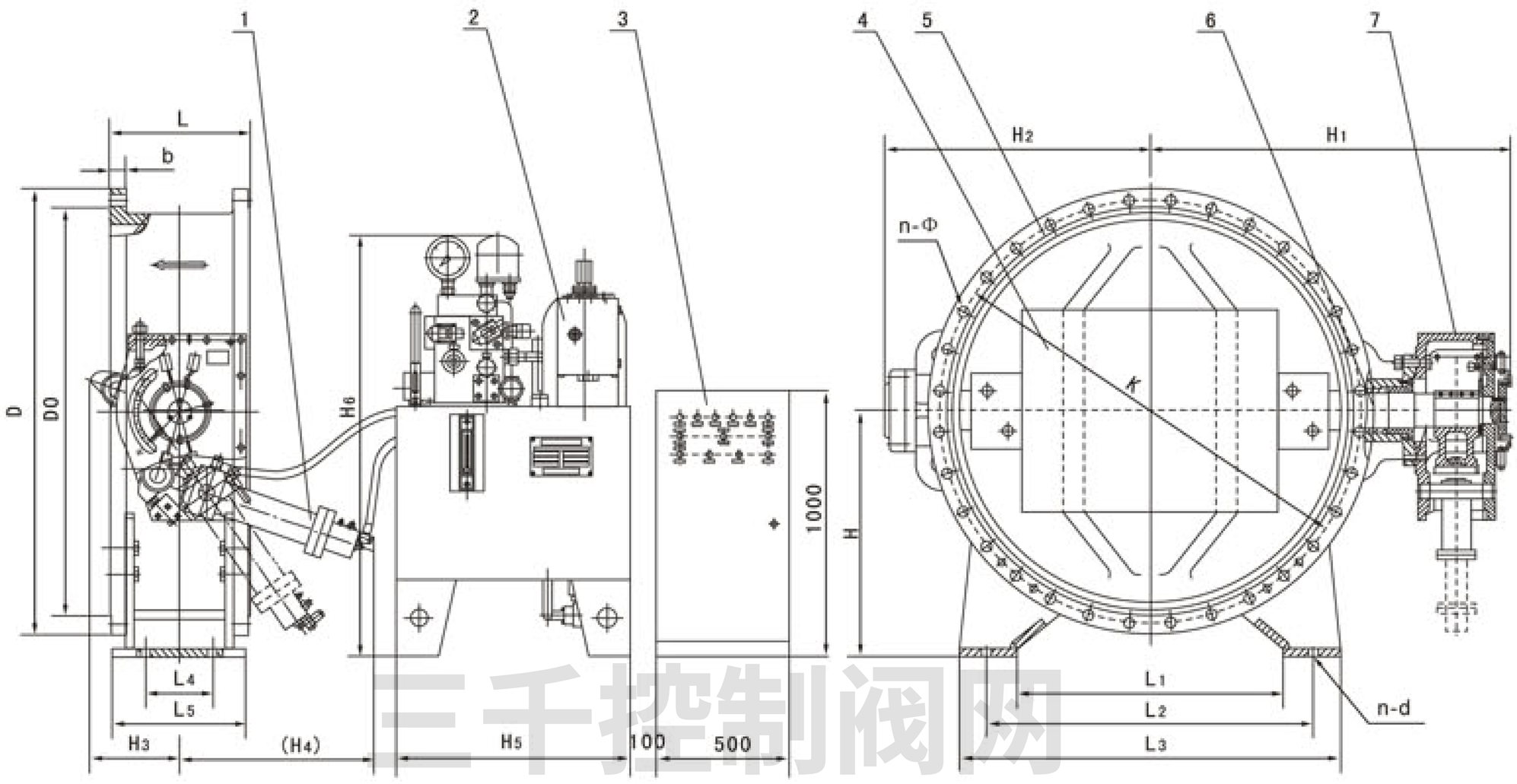

三千控制阀网

本示图为液控阀B型且液电分离

This diagram is B type hydraulic control valve with separated electric control case and hydraulic control case

www.cv3000.com

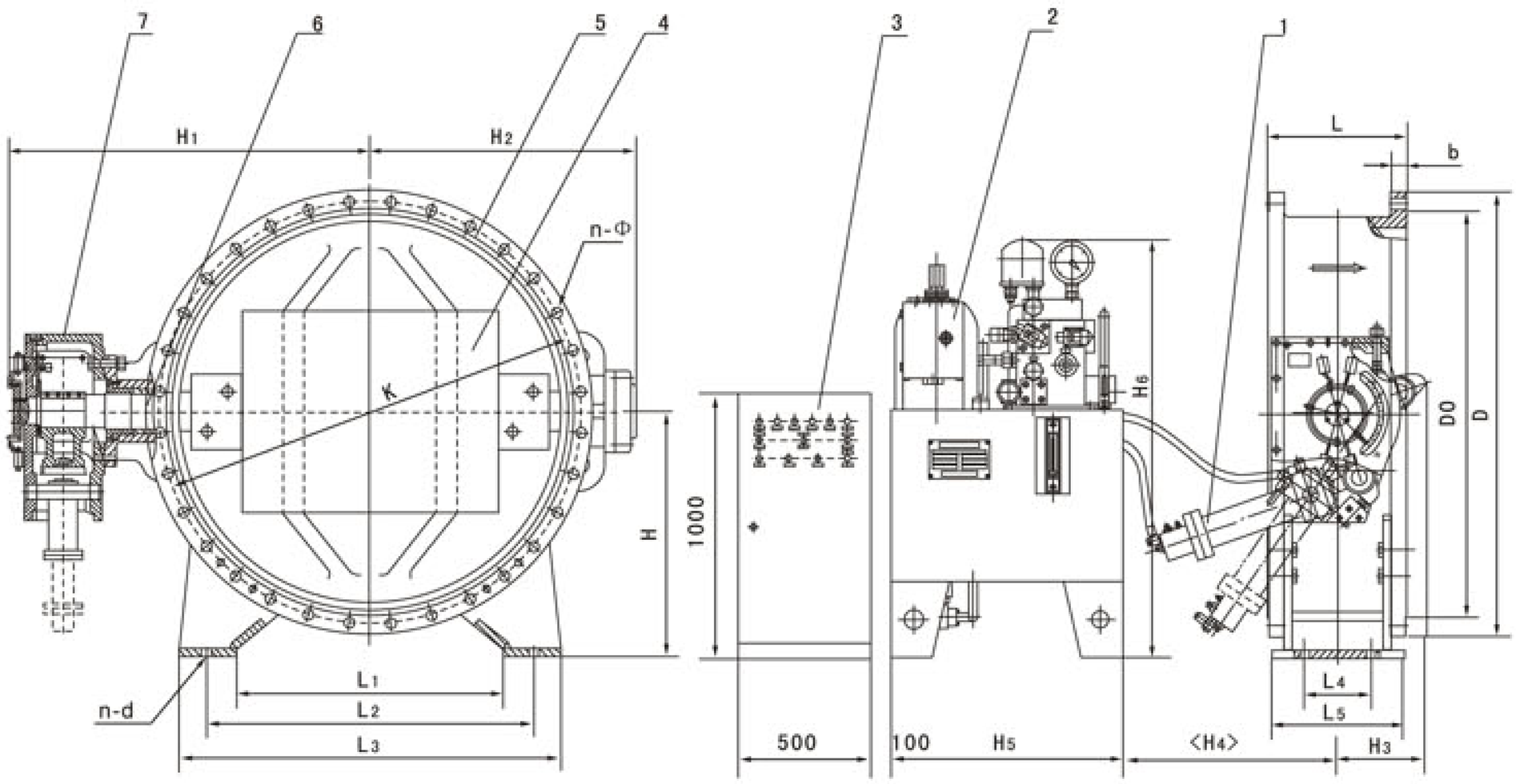

1.摆动油缸 2.液压站 3.电控柜 4.蝶板 5.阀体 6.传动阀轴 7.传动装置

1.rocking oil cylinder 2.hydraulic station 3.electric control case 4.disk 5.body 6.transmission shaft 7.actuator

注：本阀分 A 型和 B 型，顺水流方向看油缸在左侧为 A 型，在右侧为 B 型。

Note: This valve is divided into types of A and B. Viewing in the direction of water flow, the oil cylinder on the left side is type A. On the contrary, on the right side is type B.

Dx7k41 X/H - 2.5/2.5Q 系列主要连接及外形尺寸 series main connection and external dimensions(mm)

DN	D	K	DO	N-Φ	b	L	H	H_1	H_2	H_3	H_4	H_5	H_6	L_1	L_2	L_3	L_4	L_5	n-d	A_1	A_2	传动轴 Transmission shaft
300	440	395	363	12-Φ23	24	178	310	575	285	220	670	540	816	235	315	395	/	150	2-Φ22	650	1200	Dx7k-200
350	490	445	413	12-Φ23	26	190	320	605	317	220	670	540	816	260	340	420	/	150	2-Φ22	650	1200	
400	540	495	463	16-Φ23	28	216	340	640	345	220	720	540	912	310	410	510	/	200	2-Φ22	700	1400	Dx7k-650
450	595	550	518	16-Φ23	28	222	370	670	373	220	720	540	912	350	450	550	/	220	2-Φ22	700	1400	
500	645	600	568	20-Φ23	30	229	400	735	400	240	720	540	912	320	420	520	/	220	2-Φ26	700	1400	
600	755	705	667	20-Φ26	30	267	460	800	459	240	720	610	912	400	565	640	/	244	2-Φ26	700	1400	
700	860	810	772	24-Φ26	32	292	540	856	520	240	825	610	1095	520	640	760	/	262	2-Φ26	800	1600	Dx7k-1600
800	975	920	878	24-Φ31	34	318	580	990	578	310	825	610	1095	580	740	900	/	290	2-Φ30	800	1600	
900	1075	1020	978	24-Φ31	36	330	635	1039	655	310	825	610	1095	666	820	950	/	320	2-Φ30	800	1600	
1000	1175	1120	1078	28-Φ31	36	410	695	1089	718	310	825	610	1095	728	900	1040	130	390	4-Φ30	800	1600	
1200	1375	1320	1280	32-Φ30	30	470	810	1219	845	310	825	610	1095	868	1070	1040	220	440	4-Φ30	800	1600	
1400	1575	1520	1480	36-Φ30	30	530	920	1329	975	360	855	610	1329	1000	1230	1430	250	500	4-Φ36	800	1800	Dx7k-2400
1600	1790	1730	1690	40-Φ30	32	600	1040	1479	1100	360	855	610	1329	1130	1400	1620	320	580	4-Φ36	800	1800	
1800	1990	1930	1890	44-Φ30	34	670	1140	1650	1240	360	855	610	1329	1250	1548	1800	400	650	4-Φ39	800	1800	
2000	2190	2130	2090	48-Φ30	34	760	1250	1800	1359	525	895	810	1234	1380	1700	1980	400	700	4-Φ42	900	1800	Dx7k-3900
2200	2405	2340	2295	52-Φ33	36	590	1360	1979	1500	525	940	810	1234	1550	1870	2190	330	560	4-Φ42	900	1800	Dx7k-6300

www.cv3000.com

Dx7k41 X/H - 6/6Q 系列主要连接及外形尺寸 series main connection and external dimensions(mm)

DN	D	K	DO	N-Φ	b	L	H	H_1	H_2	H_3	H_4	H_5	H_6	L_1	L_2	L_3	L_4	L_5	n-d	A_1	A_2	传动轴 Transmission shaft
300	440	395	363	12-Φ23	24	178	310	575	285	220	670	540	816	235	315	395	/	150	2-Φ22	650	1200	Dx7k-200
350	490	445	413	12-Φ23	26	190	320	605	317	220	670	540	816	260	340	420	/	150	2-Φ22	650	1200	
400	540	495	463	16-Φ23	28	216	340	640	345	220	720	540	912	310	410	510	/	200	2-Φ22	700	1400	Dx7k-650
450	595	550	518	16-Φ23	28	222	370	670	373	220	720	540	912	350	450	550	/	220	2-Φ22	700	1400	
500	645	600	568	20-Φ23	30	229	400	735	400	240	720	540	912	320	420	520	/	220	2-Φ26	700	1400	
600	755	705	667	20-Φ26	30	267	460	800	459	240	720	540	912	400	565	640	/	244	2-Φ26	700	1400	
700	860	810	772	24-Φ26	32	292	540	856	520	240	825	610	1095	520	640	760	/	262	2-Φ26	800	1600	Dx7k-1600
800	975	920	878	24-Φ31	34	318	580	991	578	310	825	610	1095	580	740	900	/	290	2-Φ30	800	1600	
900	1075	1020	978	24-Φ31	36	330	635	1039	655	310	825	610	1095	666	820	950	/	320	2-Φ30	800	1600	
1000	1175	1120	1078	28-Φ31	36	410	695	1089	718	310	825	610	1095	728	900	1040	130	390	4-Φ30	800	1600	
1200	1405	1340	1295	32-Φ34	40	470	810	1239	845	360	855	610	1329	868	1070	1240	220	440	4-Φ30	800	1800	Dx7k-2400
1400	1630	1560	1510	36-Φ37	44	530	920	1359	975	360	855	610	1329	1000	1230	1430	250	500	4-Φ36	800	1800	
1600	1830	1760	1710	40-Φ37	48	600	1040	1513	1100	525	895	810	1234	1130	1400	1620	320	580	4-Φ36	900	1800	Dx7k-3900
1800	2045	1970	1918	44-Φ40	50	670	1140	1655	1240	525	895	810	1234	1273	1548	1823	400	600	4-Φ39	900	1800	
2000	2265	2180	2125	48-Φ43	54	760	1250	1843	1359	680	895	810	1234	1380	1700	1980	400	700	4-Φ42	900	1800	Dx7k-6300
2200	2475	2390	2335	52-Φ43	60	590	1360	2074	1500	680		1068	1800	1550	1870	2190	330	560	4-Φ42	/	/	Dx7k-12500

Dx7k41$^{X}_{H}$-$^{10}_{10Q}$系列主要连接及外形尺寸 series main connection and external dimensions(mm)

DN	D	K	DO	N-Φ	b	L	H	H_1	H_2	H_3	H_4	H_5	H_6	L_1	L_2	L_3	L_4	L_5	n-d	A_1	A_2	传动轴 Transmission shaft
300	445	400	370	12-Φ23	28	178	310	630	285	220	670	540	816	235	315	395	/	150	2-Φ22	650	1200	Dx7k-200
350	505	460	429	16-Φ23	30	190	320	543	317	220	670	540	816	260	340	420	/	150	2-Φ22	650	1200	
400	565	515	480	16-Φ28	32	216	340	660	345	240	720	540	912	310	410	510	/	200	2-Φ22	700	1400	Dx7k-650
450	615	565	530	20-Φ28	32	222	370	710	380	240	720	540	912	350	450	550	/	220	2-Φ22	700	1400	
500	670	620	582	20-Φ28	34	229	400	720	425	240	720	540	912	320	420	520	/	220	2-Φ26	700	1400	
600	780	725	682	20-Φ31	36	267	460	795	469	240	720	540	912	400	565	640	/	244	2-Φ26	700	1400	
700	895	840	794	24-Φ31	40	292	540	910	530	310	825	610	1095	520	640	760	/	262	2-Φ26	800	1600	Dx7k-1600
800	1015	950	901	24-Φ34	44	318	580	980	590	310	825	610	1095	580	740	900	/	290	2-Φ30	800	1600	
900	1115	1050	1001	28-Φ34	46	330	635	1050	665	310	825	610	1095	666	820	950	/	320	2-Φ30	800	1600	
1000	1230	1160	1112	28-Φ37	50	410	695	1107	718	360	895	610	1329	728	900	1040	130	390	4-Φ30	800	1600	Dx7k-2400
1200	1455	1380	1328	32-Φ40	56	470	810	1150	855	360	895	610	1329	868	1070	1240	220	440	4-Φ30	800	1600	
1400	1675	1590	1530	36-Φ43	62	530	920	1413	1000	525	940	810	1234	1000	1230	1430	250	500	4-Φ36	900	1800	Dx7k-3900
1600	1915	1820	1750	40-Φ49	68	600	1040	1618	1130	680	940	810	1234	1130	1400	1620	320	580	4-Φ36	900	1800	Dx7k-6300
1800	2115	2020	1950	44-Φ49	70	670	1140	1758	1250	680	940	810	1234	1250	1550	1800	310	600	4-Φ39	900	1800	
2000	2325	2230	2150	48-Φ49	74	760	1250	1960	1359	680	940	810	1234	1380	1700	1980	400	700	4-Φ42	900	1800	
2200	2550	2440	2370	52-Φ56	80	590	1360	2093	1500	720	940	1068	1800	1550	1870	2190	330	560	4-Φ42	/	/	Dx7k-12500

上海控制阀门
www.cv3000.com

Dx7k41$^{X}_{H}$-16Q系列主要连接及外形尺寸 series main connection and external dimensions(mm)

DN	D	K	DO	N-Φ	b	L	H	H_1	H_2	H_3	H_4	H_5	H_6	L_1	L_2	L_3	L_4	L_5	n-d	A_1	A_2	传动轴 Transmission shaft
300	460	410	370	12-Φ28	24.5	178	310	558	300	240	670	540	816	235	315	395	/	150	2-Φ22	650	1200	Dx7k-200
350	520	470	429	16-Φ28	26.5	190	320	606	335	240	670	540	816	260	340	420	/	150	2-Φ22	650	1200	
400	580	525	480	16-Φ31	28	216	340	695	370	240	720	540	912	310	410	510	/	200	2-Φ22	700	1400	Dx7k-650
450	640	585	548	20-Φ31	30	222	370	725	408	240	720	540	912	350	450	550	/	210	2-Φ22	700	1400	
500	715	650	609	20-Φ34	31.5	229	400	794	445	310	825	540	1095	320	420	520	/	220	2-Φ26	800	1600	Dx7k-1600
600	840	770	720	20-Φ37	36	267	490	841	505	310	825	540	1095	400	565	640	/	250	2-Φ26	800	1600	
700	910	840	794	24-Φ37	39.5	292	560	951	555	360	855	610	1329	520	640	760	/	270	2-Φ26	800	1800	Dx7k-2400
800	1025	950	901	24-Φ40	43	318	620	1026	615	360	855	610	1329	580	740	900	/	290	2-Φ30	800	1800	
900	1125	1050	1001	28-Φ40	46.5	330	670	1125	695	525	895	810	1234	660	820	960	/	320	2-Φ30	900	1800	Dx7k-3900
1000	1255	1170	1112	28-Φ43	50	410	750	1235	750	680	940	810	1234	740	900	1040	130	390	4-Φ30	900	1800	Dx7k-6300

七、设计、制造标准 Ⅶ. Standard for design and manufacture.

1、阀门设计、制造符合JB/T 5299-98；金属硬密封蝶阀符合JB/T 8527-1997。

2、阀门结构长度符合GB/T 12221-89，同时符合ISO 5752-88和BS EN558-1。

3、阀门试验按照GB/T 13927-92，也可按照ISO 5208-1993或BS 6755-I-1986。

1. The design and manufacture of valve is according to JB/T 5299-98;metal hard seal. Butterfly Valve complies with JB/T 8527-1997.

2. The structure length of valve is according to GB/T 12221-89 and also complying with ISO5752-88 and BS EN558-1.

3. The valve's test and acceptance is according to GB/T 13927-92 and also complying with ISO5208-93 or BS 6755-I-1986.

八、主要零件材料 Ⅷ. Materials for main parts

零件名称 Part name	材料名称(金属硬密封)Materials name (Metal hard seal)	材料名称(橡胶软密封)Materials name (Rubber soft seal)
阀　体 Body	球墨铸铁 Ductile cast iron	灰铸铁 Gray cast iron
蝶　板 Disk	球墨铸铁 Ductile cast iron	球墨铸铁 Ductile cast iron
阀体密封圈 Body Sealing Ring	不锈钢 Stainless steel	不锈钢 Stainless steel
阀　轴 Shaft	不锈钢 Stainless steel	不锈钢 Stainless steel
蝶板密封圈 Disk Sealing Ring	不锈钢 Stainless steel	丁腈橡胶 NBR

九、安装、操作控制要求 Ⅸ. Installation, operation control requirements

(一) 安装要求 Installation requirements

1、阀门中心离水泵出口距离必需大于2000mm(图1所示)如果不能满足该条件，要采取整流措施，在可能的条件下应尽量增加此距离，以减少泵出口的紊流流态对阀门的不利影响。

2、有些泵出口处还有一段喇叭管，阀门全开时，蝶板不应处在喇叭管内(图1所示)。

3、蝶板密封平面应对着水泵出口(图2所示)。

4、液压、电气控制部分置于阀门附近，可用膨涨螺钉固定，也可不固定。

1. The center of valve should be kept away from the exit of water pump at least 2000mm(see fig1). If can not meet the condition, flow rectification measures should be taken. The distance between valve and water pump should be possibly enlarged if it is possible, to reduce the bad influence of turbulent flow to the valve at the pump exit.

2. Exits of water pumps have a section of pipe like trumpet. When the valve is being fully opened , the disk should not be close to or within the section of trumpet pipe(see fig1).

3. The seal surface of disk should be facing the exit of water pump (see fig2).

4. The hydraulic and electric control unit are separately installed near the valve, which can be either fixed with expansion bolts or not.

三千控制阀网
www.cv3000.com

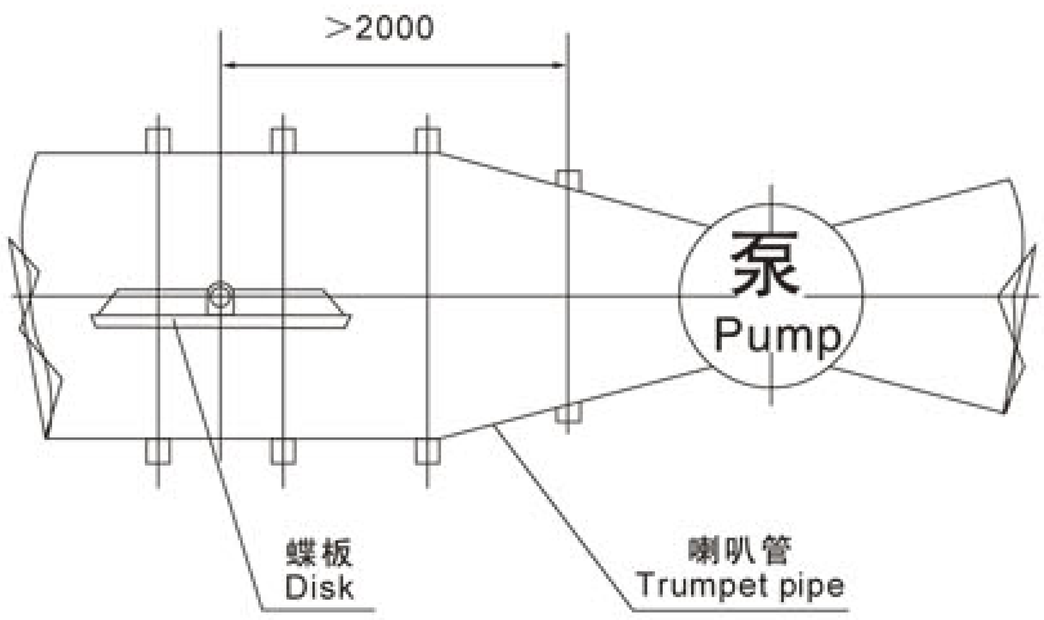

图1：安装位置要求
Fig1.position requirement of installation

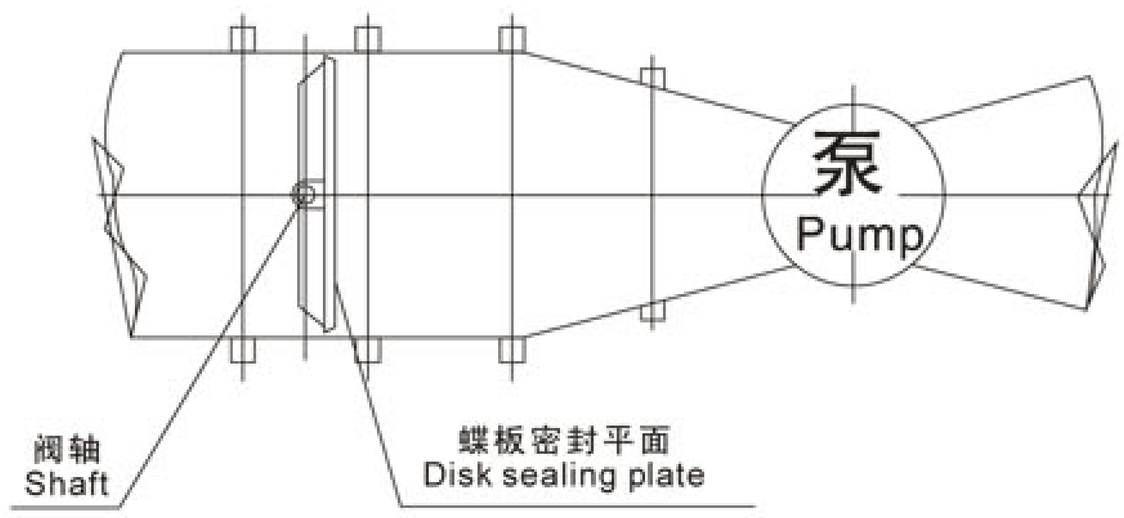

图2：安装方向要求
Fig2.direction requirement of installation

(二) 操作控制要求 Operation control requirement

1、该阀必须与泵实现联动控制，虽然该阀有就地操作的功能，但该功能仅在阀门调试过程中或管道需同一泵注水时采用，事后整个启泵、停泵操作均与阀门联动控制。

2、必须保证阀门控制电源与水泵的电源具有同等的可靠性，均与阀门联动控制。

3、启闭要求

3.1 启闭参数

见性能参数中的特殊参数，也可根据用户提供的参数调定出厂，与阀门联动控制。

3.2 开启

(1) 在离心泵出口，泵先启动，达到额定转速后，阀门匀速开启，泵阀联控。

(2) 在轴流泵出口，阀门匀速开启，当开启角达到15度左右时，泵启动，泵阀联控。

(3) 在混流泵出口，视具体情况定，若混流泵(或斜流泵)工况接近离心泵工况，则按(1)方案执行；若混流泵(或斜流泵)工况接近轴流泵工况，则按(2)方案执行。

(4) 也可按用户提出的方案开启。

3.3 关闭

无论何种类型的泵，均需满足停泵同时阀门关闭，泵阀联控。

特别提示：本阀不可用作调节流量。

1. The combination control action of the pump and the valve must be realized. Although the valve has on-site control function, such function is only used during the process of valve debugging or when pipe needs water powering from the same pump. After that, the closing or opening operation of pump and valve must realize combination control.

2. The power supply of valve and pump should be ensured to have equal reliability and keep combination control with valve.

3. Opening and closing requirement of valve.

3.1 Parameters of opening and closing

Please refer to "MAIN PERFORMANCE DATA" for the special parameters. Besides, the parameters can be set according to that provided by user before leaving the factory, keeping combination control with valve.

3.2 Opening

(1) At the outlet of the eccentric pump, the pump starts to run first, the valve is being evenly and smoothly opened when the pump has reached the rated running speed and then the pump and valve realize combination control.

(2) At the outlet of the axial pump, the valve is being opened evenly and smoothly, the pump starts to run when the valve's opening has reached angle of 15 degree and then the pump and valve realize combination control.

(3) At the outlet of diagonal pump, the operation is performed according to specific circumstances, if the working condition of the diagonal pump is similar to that of the eccentric pump, the operation is performed according to scheme (1) plan. If it is similar to that of the axial pump, the operation is performed according to scheme(2) .

(4) The valve can also be opened according to the scheme proposed by the user.

3.3 Closing

No matter what type the pump is, it must meet the requirement of combination control. That is, the valve should be closed simultaneously when the pump stops running.

Special Warning: This valve should not be used for flux regulation

三千控制阀网 www.cv3000.com

十、附液压控制原理图；电气控制原理图(普通型，PLC型)

X. Enclosed the hydraulic PLC and electric control principle diagram. (conventional type, PLC type).

本蝶阀液压系统有两种系列，液电分离型为HYZF系列，共有七种规格，液电合一型为HYZG系列，共六种规格，每种规格又分为失电关阀型和得电关阀型两种，液压站代号表及对应液压原理图及电气控制原理图见后页。

The hydraulic control system of this butterfly valve has two series. HYZF series belongs to the type that electric control case separated with hydraulic control case with 7 models. HYZG series belongs to the type with electric control case and hydraulic control case combined in one, it has totally 6 models. Each model is also divided into the type of valve closing in the state connected with electricity and the type of valve closed in the state not connected with electricity. Please refer to the following pages about the dimension of hydrauic station and its hydraulic principle drawing and electric principle diagram.

失电关阀型动作表 Operation table of closing by electricity off type

动作 Operation \ 电气元件 Electric component		YV1	YV2	电机 electric motor
阀门开 Valve opening		+	+	
阀门关 Valve closing	快关 Quick closing			
	慢关 Slow closing			
P < 14.5MPa				+
P > 17MPa				

得电关阀型动作表 Operation table of closing by electricity on type

动作Operation \ 电气元件 Electric component		YV1	YV2	电机 electric motor
阀门开 Valve opening			+	
阀门关 Valve closing	快关 Quick closing	+		
	慢关 Slow closing	+		
P < 14.5MPa				+
P > 17MPa				

注：+表示得电状态，其余空白处为失电状态；下面液压原理图为失电关阀型，得电关阀型只需将液压原理图中常开型电磁球阀17换成常闭型即可。

Note: The above mentioned "+" shows the "electricity on"state, and the rest blank spaces show the"electricity off" state; the below hydraulic pressure principle diagram is valve closing by electricity off type. For the valve closing by electricity on type, it only needs to change the electromagnetic ball valve 17 from normal open to normal close type in the hydraulic principle diagram.

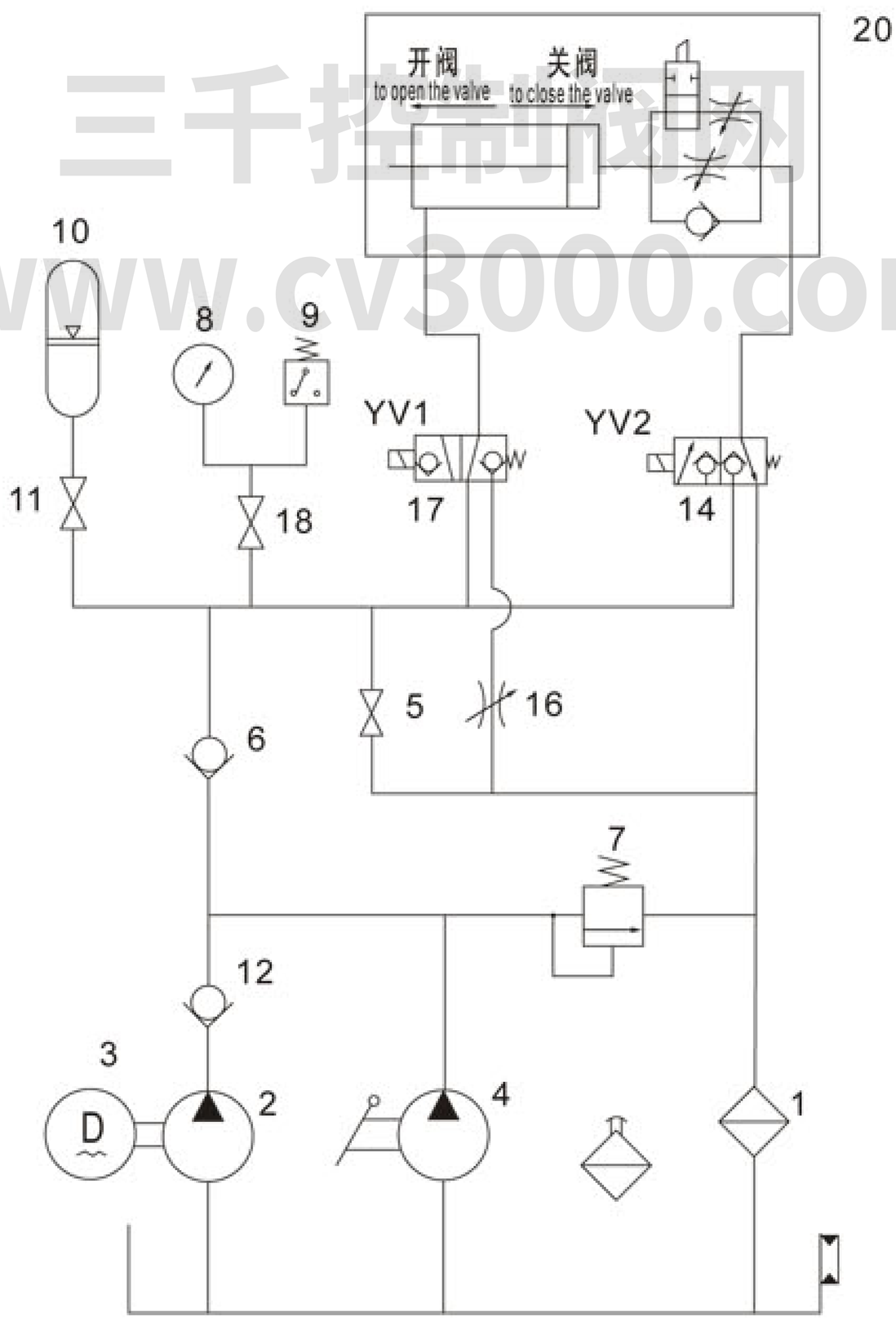

三千控制阀网
www.cv3000.com

图1 YZF200 YZF650 液压原理图
Diagram 1 The hydraulic principle diagram of YZF200 YZF650

失电关阀型动作表 Operation table of closing by electricity off type

动作Operation \ 电气元件 Electric component		YV1	YV2	电机 Electric motor
阀门开 Valve opening		+	+	
阀门停 Valve stopping		+		
阀门关 Valve closing	快关 Quick closing			
	慢关 Slow closing			
P＜14.5MPa				+
P＞17MPa				

得电关阀型动作表 Operation table of closing by electricity on type

动作Operation \ 电气元件 Electric component		YV1	YV2	电机 Electric motor
阀门开 Valve opening			+	
阀门停 Valve stopping				
阀门关 Valve closing	快关 Quick closing	+		
	慢关 Slow closing	+		
P＜14.5MPa				+
P＞17MPa				

注：+表示得电状态，其余空白处为失电状态；下面液压原理图为失电关阀型，得电关阀型只需将液压原理图中常闭型电磁球阀14换成常开型即可。

Note: The above mentioned "+" shows the "electricity on"state, and the rest blank spaces show the"electricity off"state; the below hydraulic pressure principle diagram is valve closing by electricity off type. For the valve closing by electricity on type, it only needs to change the electromagnetic ball valve 14 from normal close to normal open type in the hydraulic principle diagram.

三千控制网
www.cv3000.com

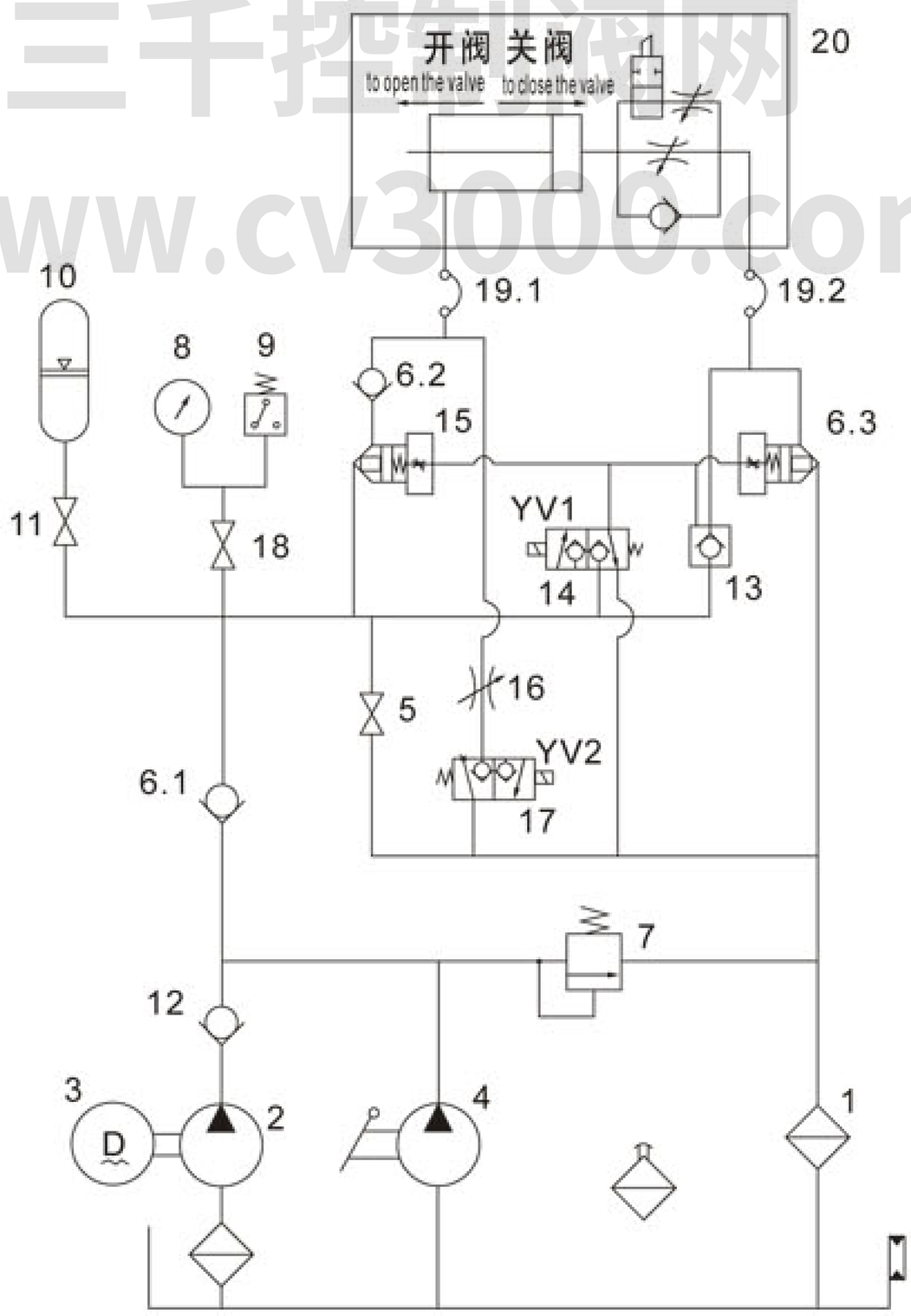

图2 YZF1600 YZF2400 YZF3900和YZF6300 液压原理图

Diagram 2 The hydraulic principle diagram of YZF1600 YZF2400 YZF3900 and YZF6300

失电关阀型动作表 Operation table of closing by electricity off type

动作Operation \ 电气元件 Electric component		YV1	YV2	电机 Electric motor
阀门开 Valve opening		+	+	
阀门停 Valve stopping		+		
阀门关 Valve closing	快关 Quick closing			
	慢关 Slow closing			
P＜14.5MPa				+
P＞17MPa				

得电关阀型动作表 Operation table of closing by electricity on type

动作Operation \ 电气元件 Electric component		YV1	YV2	电机 Electric motor
阀门开 Valve opening			+	
阀门停 Valve stopping				
阀门关 Valve closing	快关 Quick closing	+		
	慢关 Slow closing	+		
P＜14.5MPa				+
P＞17MPa				

注：+表示得电状态，其余空白处为失电状态；下面液压原理图为失电关阀型，得电关阀型只需将液压原理图中常闭型电磁球阀14换成常开型即可。

Note: The above mentioned "+" shows the "electricity on"state, and the rest blank spaces show the"electricity off"state; the below hydraulic pressure principle diagram is valve closing by electricity off type. For the valve closing by electricity on type, it only needs to change the electromagnetic ball valve 14 from normal close to normal open type in the hydraulic principle diagram.

三千控制阀网
www.cv3000.com

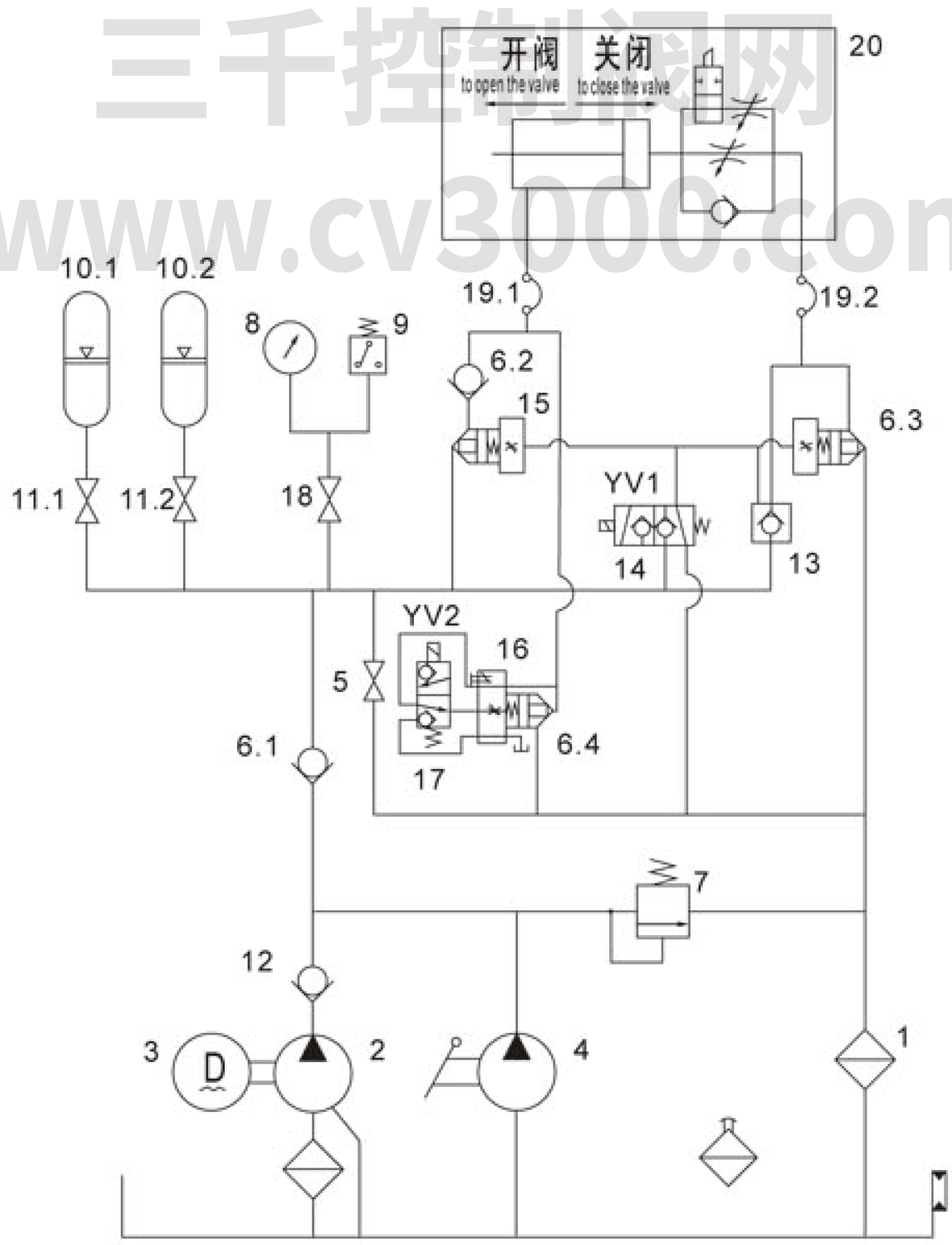

图3 YZF12500 液压原理图

Diagram 3 The hydraulic principle diagram of YZF12500

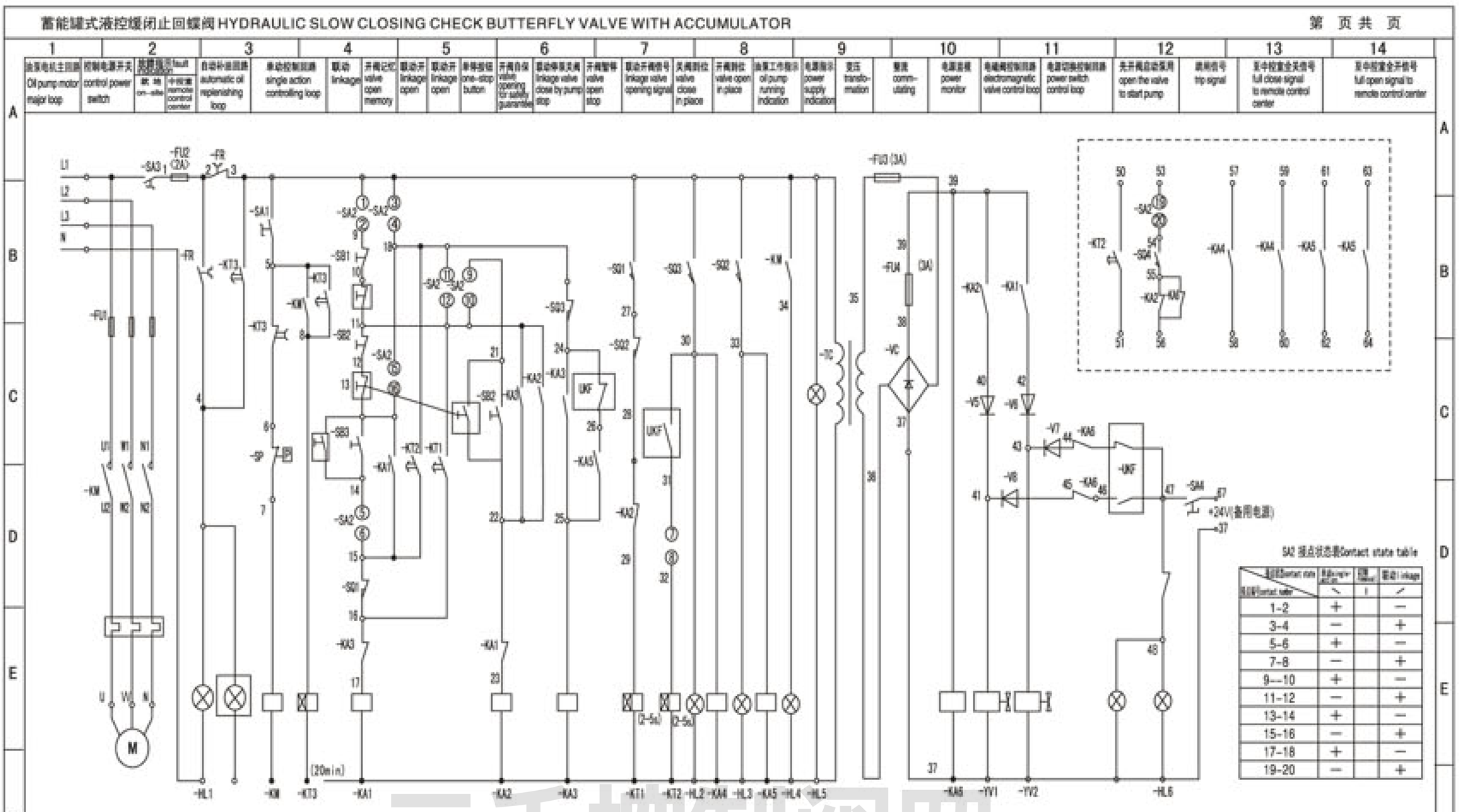

继电器控制电气原理图（通电开，通电关阀型）
Relay control electric principle diagram (switch on-off type)

注：虚线框内为远控单动信号（用户选用）UKF 为水泵油开关辅助触点（泵阀联锁信号）
Note: In the dashed frame is remote control one-stop signal (For users' selection)
UKF is accessorial contact of water pump oil switch (valve and pump interlock signal)

上海明珠阀门制造有限公司 Shanghai Mingzhu Valve MFG.Co.,Ltd

三工机械阀网 www.cy3000.com

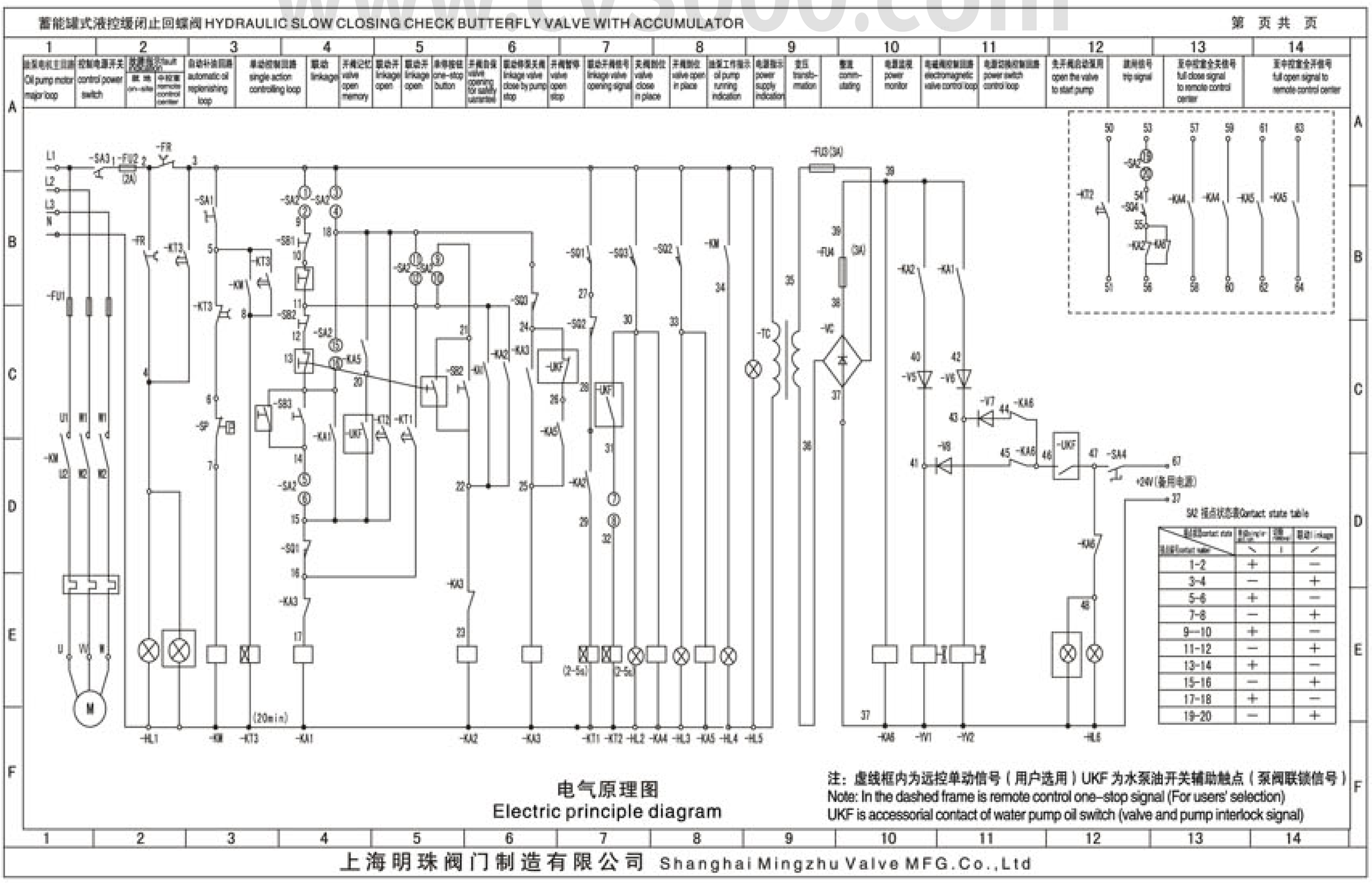

电气原理图
Electric principle diagram

注：虚线框内为远控单动信号（用户选用）UKF 为水泵油开关辅助触点（泵阀联锁信号）
Note: In the dashed frame is remote control one-stop signal (For users' selection)
UKF is accessorial contact of water pump oil switch (valve and pump interlock signal)

上海明珠阀门制造有限公司 Shanghai Mingzhu Valve MFG.Co.,Ltd

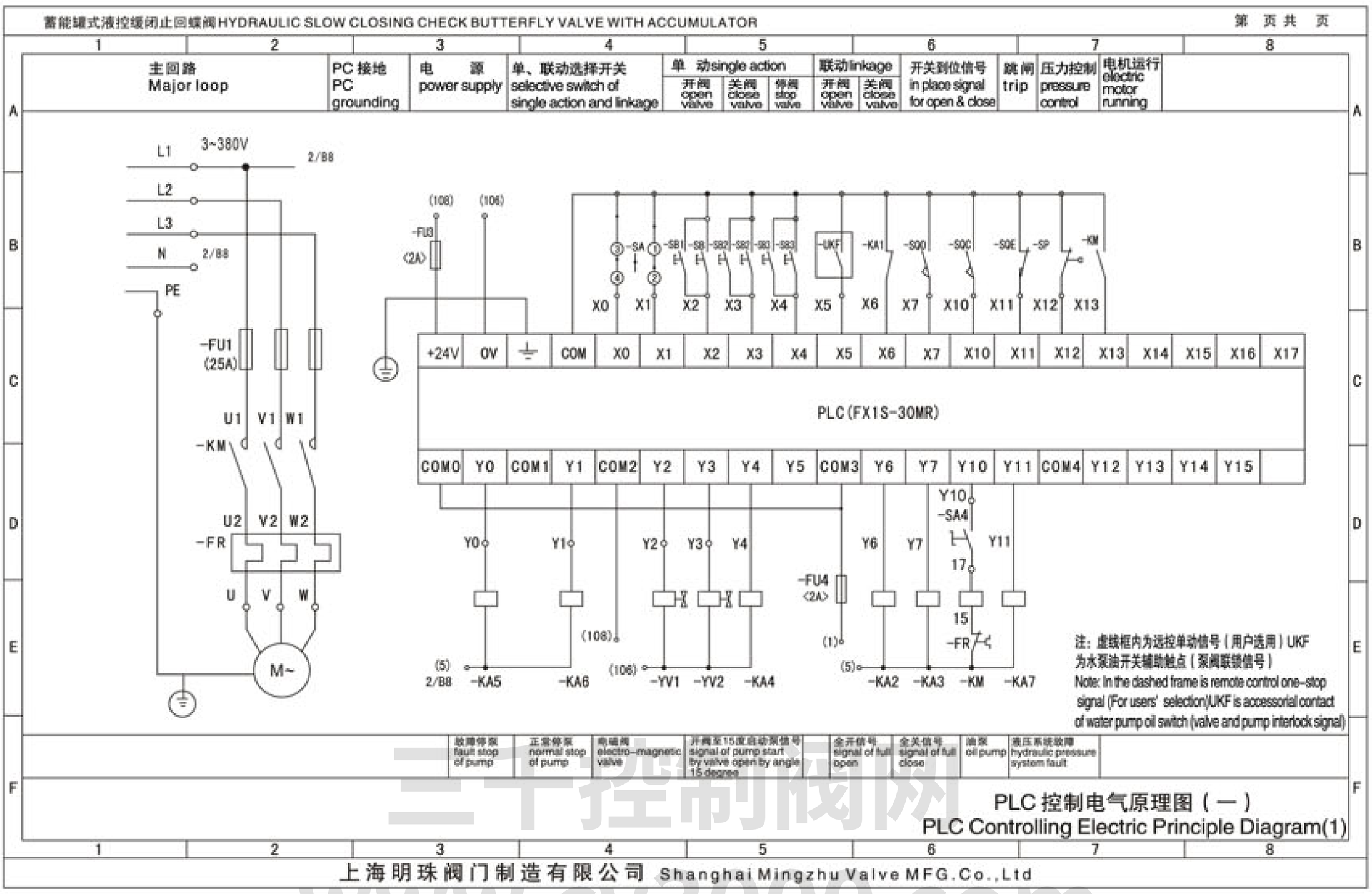

二手控制阀网
www.cv3000.com

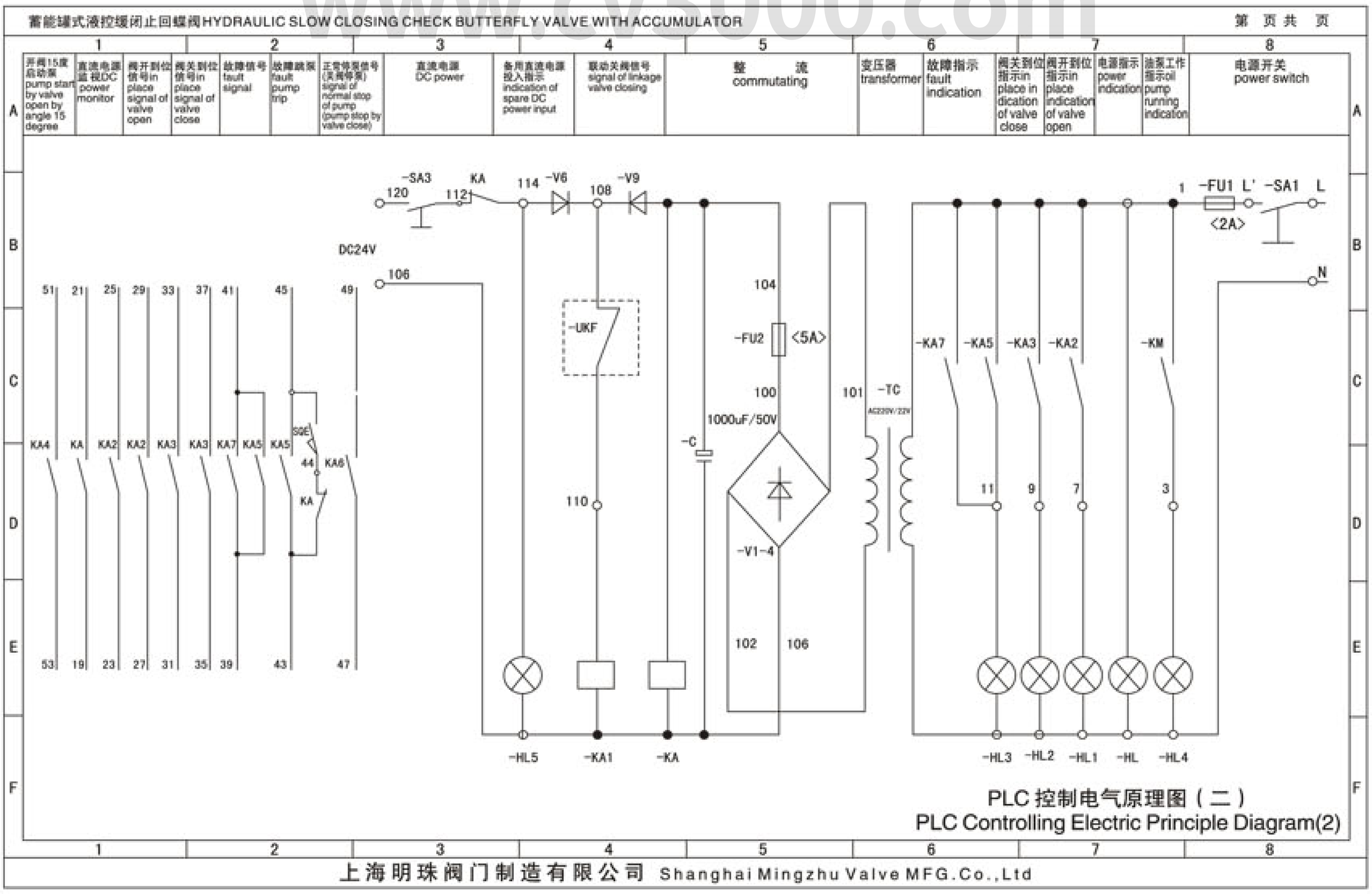

上海明珠阀门制造有限公司
SHANGHAI MINGZHU VALVE MFG.CO.,LTD.

厂址：上海市奉贤区金汇镇工业大道1111号
ADD:No.1111 Industry Road Jinhui Town, Fengxian County. Shanghai, China
电话(TEL)：021-57482386　57483788
传真(FAX)：021-57482872
邮编(P.C)：201404
网络实名：上海明珠阀门
http://www.mingzhu-valve.com
E-mail:mzfm6688@163.com

工控制阀网
www.cv3000.com

中国进出口商品检验总公司质量认证中心　中石化物资资源市场成员　中石油一级供应网络成员　国家电力　合同信用等级认证　中国人民保险产品责任保险　中国阀门协会成员

以上产品资料仅供参考，如有参数改动本公司恕不另行通知并不承担法律责任。